LUMIGEAR

LED Drivers Guide

Powering Design Freedom

AF-Series

	Model	Power	Input Voltage	Output Current	Output Voltage	Efficiency	Dimension
 Tri-mode	AFP-B1-012S0420U-VT-b-PC	12W	120-277VAC	42-420mA	10-42VDC	85%	72×40.5×27mm 2.8×1.6×1.1 in.
	AFP-B1-025S0850U-VT-b-PC	25W	120-277VAC	85-850mA	10-42VDC	87%	72×40.5×27mm 2.8×1.6×1.1 in.
	AFP-B1-040S1200U-VT-b-PC	40W	120-277VAC	120-1200mA	10-42VDC	88%	72×40.5×27mm 2.8×1.6×1.1 in.
 Tri-mode	AFP-B1E-012S0420U-VT-PC	12W	120-277VAC	42-420mA	10-42VDC	85%	85.6×41.6×24.7mm 3.3×1.6×0.9 in.
	AFP-B1E-024S0850U-VT-PC	24W	120-277VAC	84-850mA	10-42VDC	86%	85.6×41.6×24.7mm 3.3×1.6×0.9 in.
	AFP-B1E-036S1000U-VT-PC	36W	120-277VAC	100-1000mA	10-42VDC	87%	85.6×41.6×24.7mm 3.3×1.6×0.9 in.
 Tri-mode	AFP-C1-012S0400U-VT-PC-S AFP-C1-012S0400U-VT-PC-B	12W	120-277VAC	40-400mA	10-40VDC	85%	98×31×23 mm 3.8×1.2×0.9 in.
	AFP-C1-020S0700U-VT-PC-S AFP-C1-020S0700U-VT-PC-B	20W	120-277VAC	70-700mA	10-40VDC	87%	98×31×23 mm 3.8×1.2×0.9 in.
	AFP-C1-036S1200U-VT-PC-S AFP-C1-036S1200U-VT-PC-B	36W	120-277VAC	120-1200mA	10-40VDC	88%	98×31×23 mm 3.8×1.2×0.9 in.
	AFP-D1-012S0400U-VT-PC-S	12W	120-277VAC	100-400mA	10-40VDC	84%	71×27.5×20.3 mm 2.8×1.1×0.8 in.
 DALI-2 or Tri-mode	AFP-E1-015D0600U-DALI-PC-S AFP-E1-015D0600U-DALI-PC-B	15W	120-277VAC	150-600mA	10-55VDC	88%	111×30.5×24 mm 4.3×1.2×0.9 in.
	AFP-E1-030D1200U-DALI-PC-S AFP-E1-030D1200U-DALI-PC-B	30W	120-277VAC	300-1200mA	10-55VDC	88%	111×30.5×24 mm 4.3×1.2×0.9 in.
	AFP-E1-050D1400U-DALI-PC-S AFP-E1-050D1400U-DALI-PC-B	50W	120-277VAC	500-1400mA	10-55VDC	89%	111×30.5×24 mm 4.3×1.2×0.9 in.
	AFP-E1-050S1400U-VT-PC-S AFP-E1-050S1400U-VT-PC-B	50W	120-277VAC	400-1400mA	5-55VDC	89%	111×30.5×24 mm 4.3×1.2×0.9 in.
 TRIAC or 0-10V	AFI-A1-010S0300U-V-PC	10W	120-277VAC	100-300mA	20-42VDC	87%	53×36×24.6 mm 2.1×1.4×0.9 in.
	AFI-A1-020S0600U-V-PC	20W	120-277VAC	200-600mA	20-42VDC	89%	53×36×24.6 mm 2.1×1.4×0.9 in.
	AFI-A1-010S0300U-T-PC	10W	120-277VAC	100-300mA	20-42VDC	87%	53×36×24.6 mm 2.1×1.4×0.9 in.
	AFI-A1-020S0600U-T-PC	20W	120-277VAC	200-600mA	20-42VDC	89%	53×36×24.6 mm 2.1×1.4×0.9 in.
 N/A	AFI-V1-024S012U-ND	24W	120-277VAC	0-2000mA	12VDC	87%	53×32.8×24.6 mm 2.1×1.3×0.9 in.
	AFI-V1-024S024U-ND	24W	120-277VAC	0-1000mA	24VDC	87%	53×32.8×24.6 mm 2.1×1.3×0.9 in.
	AFI-V1-024S048U-ND	24W	120-277VAC	0-500mA	48VDC	88%	53×32.8×24.6 mm 2.1×1.3×0.9 in.
 Tri-mode	AFI-R1-015S0700U-VT-PC	15W	120-277VAC	150-700mA	5-42VDC	88%	D58*H27 mm D2.2*H1.0 in.
	AFI-R1-030S1200U-VT-PC	30W	120-277VAC	300-1200mA	5-42VDC	89%	D58*H27 mm D2.2*H1.0 in.
 DALI-2 or 0-10V	AFS-A1-030S0850U-V-AUX-PC AFS-A1-030D0850U-V-AUX-PC AFS-B1-030D0850U-DALI-PC AFS-C1-030D0850U-DALI-PC AFS-D1-030D0850U-DALI-PC	30W	120-277VAC	300-850mA	5-55V/10-55V	88%	244×18.2×16 mm 9.6×0.7×0.6 in.
	AFS-A1-050S1200U-V-AUX-PC AFS-A1-050D1200U-V-AUX-PC AFS-B1-050D1200U-DALI-PC AFS-C1-050D1200U-DALI-PC AFS-D1-050D1200U-DALI-PC	50W	120-277VAC	500-1200mA	5-55V/10-55V	89%	244×18.2×16 mm 9.6×0.7×0.6 in.
	AFS-A1-080S2000U-V-AUX-PC AFS-A1-080D2000U-V-AUX-PC AFS-B1-080D2000U-DALI-PC AFS-C1-080D2000U-DALI-PC AFS-D1-080D2000U-DALI-PC	80W	120-277VAC	800-2000mA	5-55V/10-55V	91%	355.7×18.2×16 mm 14×0.7×0.6 in.

b=BLANK/AUX
BLANK:without aux output
AUX:with aux output

PD/ES-Series

	Model	Power	Input Voltage	Output Current	Output Voltage	Efficiency	Dimension
 Tri-mode	PDC-A1-025S0700a-VT-b-PC-c-d	25W	120-277VAC	70-700mA	10-55VDC	88%	107.5×60.3×27.5 mm 4.2×2.3×1.1 in
	PDC-A1-040S1200a-VT-b-PC-c-d	40W	120-277VAC	120-1200mA	10-55VDC	88.5%	107.5×60.3×27.5 mm 4.2×2.3×1.1 in
	PDC-A1-055S1500a-VT-b-PC-c-d	55W	120-277VAC	150-1500mA	10-55VDC	89.5%	107.5×60.3×27.5 mm 4.2×2.3×1.1 in
 DALI-2 or 0-10V	PDL-D1-030D1400a-DALI-PC PDL-A1-030D1400a-V-b-PC	30W	120-277VAC 120-347VAC	0-10V:140-1400mA DALI:300-1050mA	8-55VDC	89%	280×30×21.5 mm 11.0×1.2×0.8 in.
	PDL-D1-050D1400a-DALI-PC PDL-A1-050D1400a-V-b-PC	50W	120-277VAC 120-347VAC	0-10V:140-1400mA DALI:500-1400mA	8-55VDC	89%	280×30×21.5 mm 11.0×1.2×0.8 in.
	PDL-D1-085D2300a-DALI-PC-e PDL-A1-085D2300a-V-b-PC-e	85W	120-277VAC 120-347VAC	0-10V:230-2300mA DALI:850-2300mA	10-55VDC	90%	380×30×25.4 mm 14.9×1.2×1.0 in.
 0-10V	ESC-A1-025S1250a-V-b-PC-c-d	25W	120-277VAC 120-347VAC	125-1250mA	8-55VDC	89%	107.5×60.3×27.5 mm 4.2×2.3×1.1 in.
	ESC-A1-040S1400a-V-b-PC-c-d	40W	120-277VAC 120-347VAC	140-1400mA	8-55VDC	90%	107.5×60.3×27.5 mm 4.2×2.3×1.1 in.
	ESC-A1-055S2000a-V-b-PC-c-d	55W	120-277VAC 120-347VAC	200-2000mA	10-55VDC	90%	107.5×60.3×27.5 mm 4.2×2.3×1.1 in.
 Dual-channel 0-10V	ESC-B1-025D1250a-V-b-PC-c-d	25W	120-277VAC 120-347VAC	125-1250mA	10-55VDC	87%	107.5×60.3×27.5 mm 4.2×2.3×1.1 in.
	ESC-B1-040D1400a-V-b-PC-c-d	40W	120-277VAC 120-347VAC	140-1400mA	10-55VDC	89%	107.5×60.3×27.5 mm 4.2×2.3×1.1 in.
	ESC-B1-055D2000a-V-b-PC-c-d	55W	120-277VAC 120-347VAC	200-2000mA	10-55VDC	89%	107.5×60.3×27.5 mm 4.2×2.3×1.1 in.
 0-10V	ESL-A1-030S1050a-V-b-PC	30W	120-277VAC 120-347VAC	105-1050mA	8-55VDC	87%	280×30×21.5 mm 11.0×1.2×0.8 in.
	ESL-A1-050S1400a-V-b-PC	50W	120-277VAC 120-347VAC	140-1400mA	8-55VDC	89%	280×30×21.5 mm 11.0×1.2×0.8 in.
	ESL-A1-085S2300a-V-b-PC-e	85W	120-277VAC 120-347VAC	230-2300mA	10-55VDC	90%	380×30×25.4 mm 14.9×1.2×1.0 in.
	ESL-A1-096S2800a-V-b-PC-e	96W	120-277VAC 120-347VAC	280-2800mA	10-55VDC	91.5%	380×30×25.4 mm 14.9×1.2×1.0 in.
	ESL-A1-030D1050a-V-b-PC-fg	30W	120-277VAC 120-347VAC	105-1050mA	10-55VDC	87%	280×30×21.5 mm 11.0×1.2×0.8 in.
	ESL-A1-050D1400a-V-b-PC-fg	50W	120-277VAC 120-347VAC	140-1400mA	10-55VDC	89%	280×30×21.5 mm 11.0×1.2×0.8 in.
 0-10V	ESL-A1E-030S-1050a-V-b-PC-fg	30W	120-277VAC 120-347VAC	300-1050mA	20-50VDC	88%	280×30×21.5 mm 11.0×1.2×0.8 in.
	ESL-A1E-050S-1400a-V-b-PC-fg	50W	120-277VAC 120-347VAC	500-1400mA	20-50VDC	88%	280×30×21.5 mm 11.0×1.2×0.8 in.

a=U/M
U:120-277VAC
M:120-347VAC

b=BLANK/AUX
BLANK:without aux output
AUX:with aux output

c=A,B,C,D
A:without INT and CCT Switch
B:with INT Switch
C:with CCT Switch
D:with INT+CCT Switch

d=BLANK/M
BLANK:Stud type
M:Mounting feet

e=2 to 10 Default to 2
which indicates surge protection level,
eg:2 indicate 2kV

f=BLANK/T/F/V
BLANK:without INT switch
T:with 3INT switch
F:with 4INT switch
V:with 5INT switch

g=BLANK/T/F/V
BLANK:without CCT switch
T:with 3CCT switch
F:with 4CCT switch
V:with 5CCT switch

CV-Series

	Model	Power	Input Voltage	Output Current	Output Voltage	Efficiency	Dimension
 Tri-mode	CVJ-A1-096S024a-VT CVJ-A1-096S036a-VT CVJ-A1-096S048a-VT	96W	120-277VAC 120-347VAC	0-4000mA 0-2666mA 0-2000mA	24VDC 36VDC 48VDC	91%	203.6×71.7×35.3 mm 8×2.8×1.4 in.
	CVJ-A1-192D024a-VT CVJ-A1-192D036a-VT CVJ-A1-192D048a-VT	2*96W	120-277VAC 120-347VAC	2*(0-4000)mA 2*(0-2666)mA 2*(0-2000)mA	24VDC 36VDC 48VDC	91%	230×115.6×40 mm 9×4.5×1.5 in.
 N/A	CVP-A1-096S024U-ND	96W	120-277VAC	0-4000mA	24VDC	94%	140×28×20.7 mm 5.5×1.1×0.8 in.
	CVP-A1-096S036U-ND	96W	120-277VAC	0-2667mA	36VDC	94%	140×28×20.7 mm 5.5×1.1×0.8 in.
	CVP-A1-096S048U-ND	96W	120-277VAC	0-2000mA	48VDC	94%	140×28×20.7 mm 5.5×1.1×0.8 in.
 Tri-mode	CVW-A1-096S024a-VT	96W	120-277VAC 120-347VAC	0-4000mA	24VDC	90%	191×34.5×32 mm 7.5×1.3×1.2 in.
	CVW-A1-096S036a-VT	96W	120-277VAC 120-347VAC	0-2666mA	36VDC	91%	191×34.5×32 mm 7.5×1.3×1.2 in.
	CVW-A1-096S048a-VT	96W	120-277VAC 120-347VAC	0-2000mA	48VDC	91%	191×34.5×32 mm 7.5×1.3×1.2 in.
 0-10V	CVL-B1-096S024U-V	96W	120-277VAC	0-4000mA	24VDC	89%	210.8×44.5×30.5 mm 8.3×1.7×1.2 in.
	CVL-B1-096S048U-V	96W	120-277VAC	0-2000mA	48VDC	89%	210.8×44.5×30.5 mm 8.3×1.7×1.2 in.
 N/A	AFI-V1-024S012U-ND	24W	120-277VAC	0-2000mA	12VDC	87%	53×32.8×24.6 mm 2.1×1.3×0.9 in.
	AFI-V1-024S024U-ND	24W	120-277VAC	0-1000mA	24VDC	87%	53×32.8×24.6 mm 2.1×1.3×0.9 in.
	AFI-V1-024S048U-ND	24W	120-277VAC	0-500mA	48VDC	88%	53×32.8×24.6 mm 2.1×1.3×0.9 in.
	DC-A1-384W5CH-DMX-PC	384W	12-48VDC	8A	12-48VDC	99%	65×31×15.2 mm 2.5 × 1.2 × 0.6 in

a=U/M
U:120-277VAC
M:120-347VAC

Central CV Enclosure

	Driver Type	Output Voltage	Circuit Qty	Power	Control	Mounting
	P / L/W P=CVP L=CVL W=CVW	12V/24V/36V/48V	1-12 channel=1-12C	60W/96W	V=0-10V VT=0-10V+TRIAC/ELV DALI=DT6/DT8/D4i DMX=DMX512/RDM	Recessed=R Surface=S

Compact Pocket

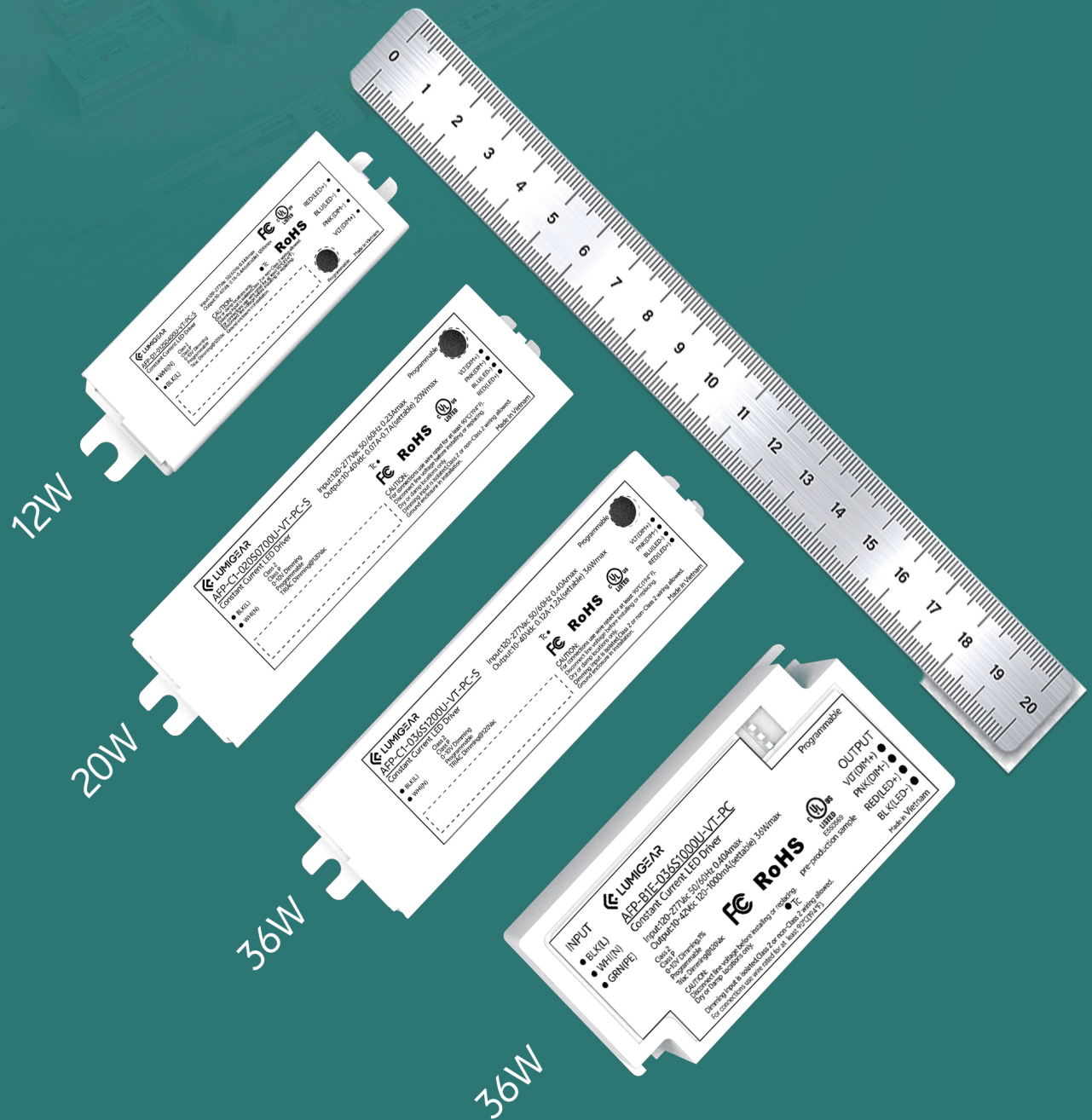

Tri mode | TRIAC | ELV | 0-10V

1%

AFP-B1E

Tri-mode

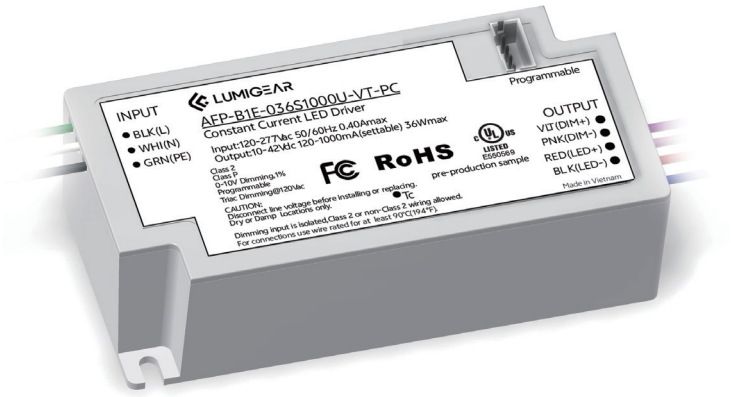

Features & Benefits

- Universal AC Input Voltage(120-277VAC)
- Compact design, Gray PC case
- Comply with phase cut dimming and isolated 0-10V dimming, dimming down to true 1%
- Suitable for indoor use
- Flicker-free, excellent camera compatibility
- UL Class2,Class P
- Combination Wave 2KV, Ringwave 2.5KV
- Operating temperature: -25℃~+50℃
- Comply with IEEE1789, UL8750

Programmable Features

- Output current(1mA step)
- Dim to off, min dimming level
- Programmable conduction angles with turn-on & turn-off for TRIAC & ELV
- Dimming curve: log/linear/customized
- OTP mode: foldback mode, linear decrease mode
- Dimming fade time
- Overload protection

Model List

Model	Rated Input Voltage	Max Output Power	Output Current	Rated Output Voltage	Dimming Control	Dimming Range	Efficiency	Dimension
AFP-B1E-012S0420U-VT-PC	120-277VAC	12W	42-420mA	10-42VDC	Tri-mode	1-100%	85%	85.6×41.6×24.7mm 3.3×1.6×0.9 in.
AFP-B1E-024S0850U-VT-PC	120-277VAC	24W	84-850mA	10-42VDC	Tri-mode	1-100%	86%	85.6×41.6×24.7mm 3.3×1.6×0.9 in.
AFP-B1E-036S1000U-VT-PC	120-277VAC	36W	100-1000mA	10-42VDC	Tri-mode	1-100%	87%	85.6×41.6×24.7mm 3.3×1.6×0.9 in.

Product Dimensions

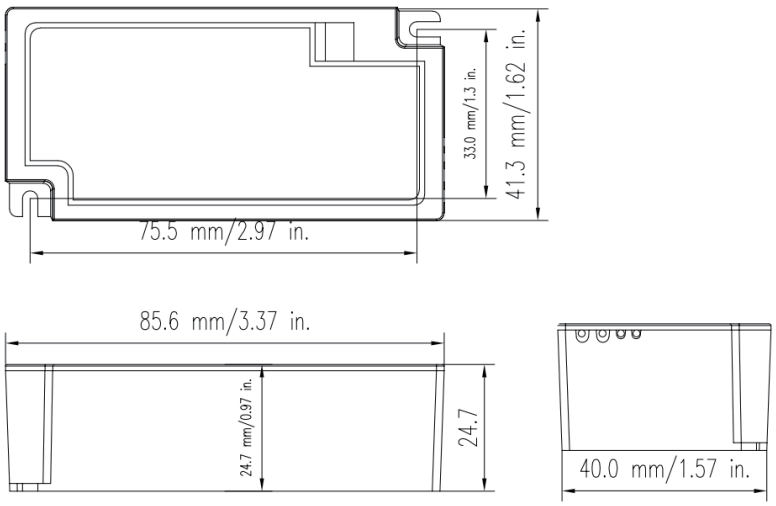

Wiring Diagram

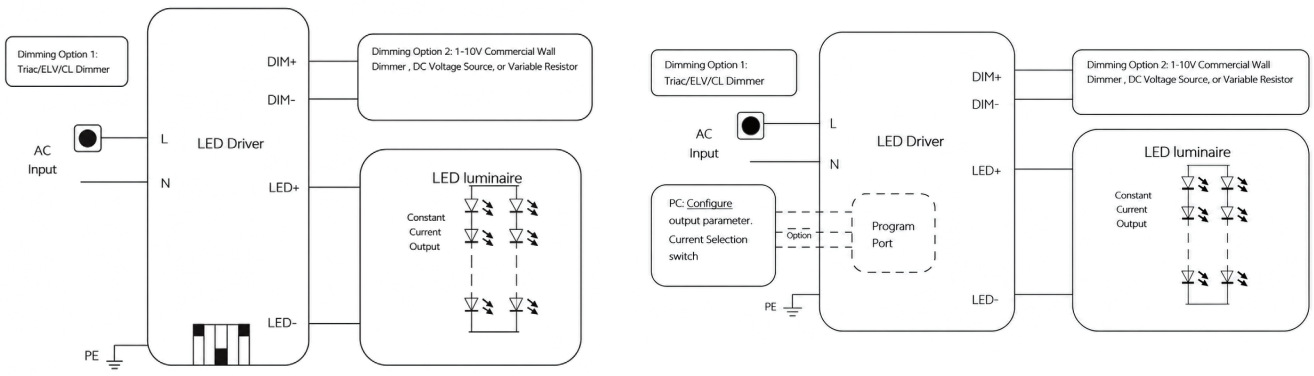

DIP PC

Programming Tools

Programming Interface	PGT-USB-TPAC-A	
Programming Cables	PGT-USB-F4P2	

AFP-B1

Tri-mode

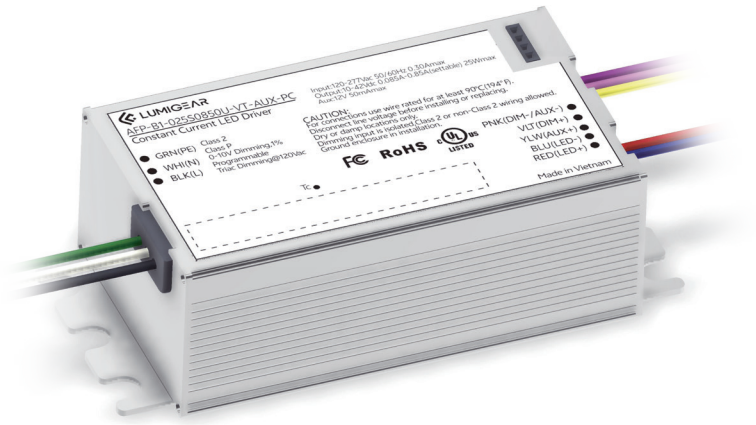

Features & Benefits

- Extreme compact form factor
- Tri-mode dimming: 0-10V,1-10V,MLV,ELV,TRIAC
- True 1% dimming over full output current range
- Wide current range coverage: 42-1200 mA
- High power density design, white aluminum sheet metal case
- Complies with phase cut dimming and isolated 0-10V dimming, dimming down to true 1%
- Suitable for indoor use
- Flicker-free, excellent camera compatibility
- Nominal lifetime up to 50,000 hours
- 5-year warranty

Programmable Features

- Output current(1mA step)
- Dim to off, min dimming level
- Programmable conduction angles with turn-on & turn-off for TRIAC & ELV
- Dimming curve: log/linear/square dimming curves
- OTP mode: foldback mode, linear decrease mode
- Dimming fade time
- Overload protection

Optional Function

- Auxiliary power 12V/50mA

Model List

Model	Rated Input Voltage	Max Output Power	Output Current	Rated Output Voltage	Dimming Control	Dimming Range	Efficiency	Dimension
AFP-B1-012S0420U-VT-b-PC	120-277VAC	12W	42-420mA	10-42VDC	Tri-mode	1-100%	85%	72×40.5×27mm 2.8×1.6×1.1 in.
AFP-B1-025S0850U-VT-b-PC	120-277VAC	25W	85-850mA	10-42VDC	Tri-mode	1-100%	87%	72×40.5×27mm 2.8×1.6×1.1 in.
AFP-B1-040S1200U-VT-b-PC	120-277VAC	40W	120-1200mA	10-42VDC	Tri-mode	1-100%	88%	72×40.5×27mm 2.8×1.6×1.1 in.

b=BLANK/AUX
BLANK:without aux output
AUX:with aux output

Product Dimensions

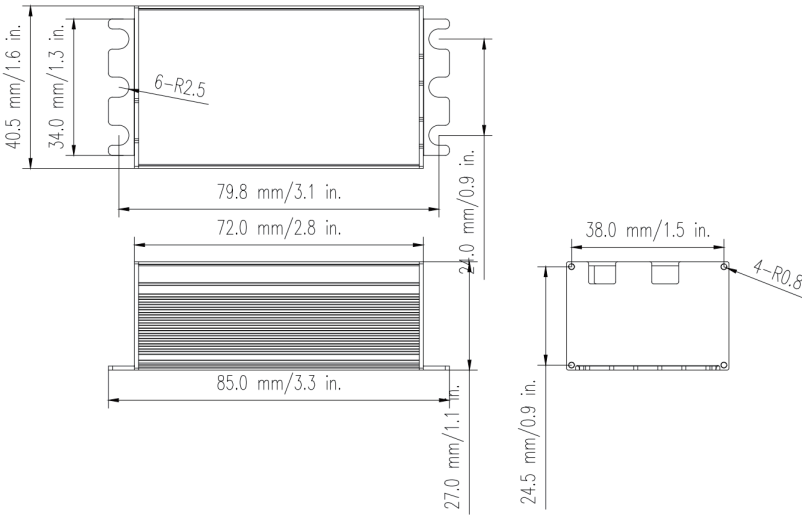

Wiring Diagram

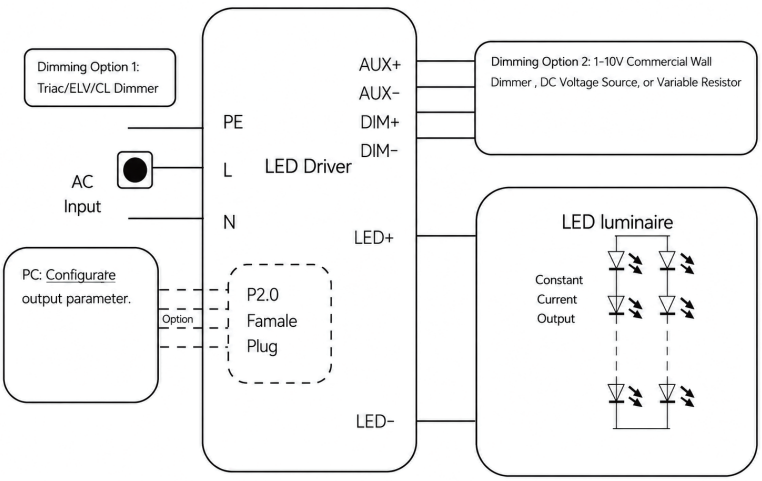

Programming Tools

Programming Interface	PGT-USB-TPAC-A	
Programming Cables	PGT-USB-M4P2	

AFP-C1/D1

Tri-mode



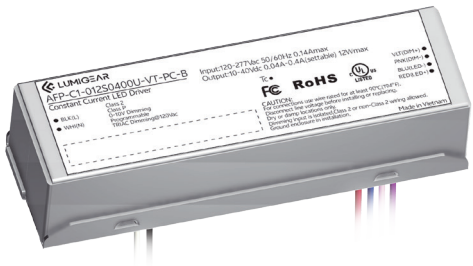

Features & Benefits

- Extreme compact form factor
- Tri-mode dimming: 0-10V,1-10V,MLV,ELV,TRIAC
- True 1% dimming over full output current range
- Wide current range coverage: 40-1200 mA
- High power density design, white aluminum sheet metal case
- Complies with phase cut dimming and isolated 0-10V dimming, dimming down to true 1%
- Suitable for indoor use
- Flicker-free, excellent camera compatibility
- Nominal lifetime up to 50,000 hours
- 5-year warranty

Programmable Features

- Output current(1mA step)
- Dim to off, min dimming level
- Programmable conduction angles with turn-on & turn-off for TRIAC & ELV
- Dimming curve: log/linear/customized
- OTP mode: foldback mode, linear decrease mode
- Dimming fade time
- Over load protection

Optional Function

- Side feed and bottom feed

Model List

Model	Rated Input Voltage	Max Output Power	Output Current	Rated Output Voltage	Dimming Control	Dimming Range	Efficiency	Dimension
AFP-C1-012S0400U-VT-PC-S AFP-C1-012S0400U-VT-PC-B	120-277VAC	12W	40-400mA	10-40VDC	Tri-mode	1-100%	85%	98×31×23 mm 3.8×1.2×0.9 in.
AFP-C1-020S0700U-VT-PC-S AFP-C1-020S0700U-VT-PC-B	120-277VAC	20W	70-700mA	10-40VDC	Tri-mode	1-100%	87%	98×31×23 mm 3.8×1.2×0.9 in.
AFP-C1-036S1200U-VT-PC-S AFP-C1-036S1200U-VT-PC-B	120-277VAC	36W	120-1200mA	10-40VDC	Tri-mode	1-100%	88%	98×31×23 mm 3.8×1.2×0.9 in.
AFP-D1-012S0400U-VT-PC-S	120-277VAC	12W	100-400mA	10-40VDC	Tri-mode	1-100%	84%	71×27.5×20.3 mm 2.8×1.1×0.8 in.

Product Dimensions

Side feed

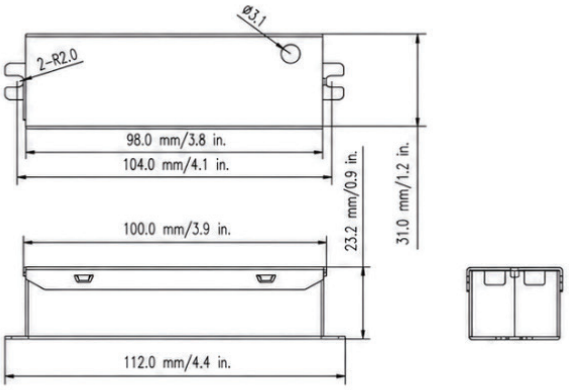

Bottom feed

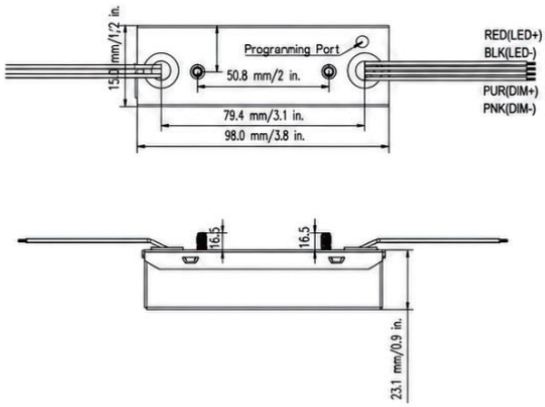

Wiring Diagram

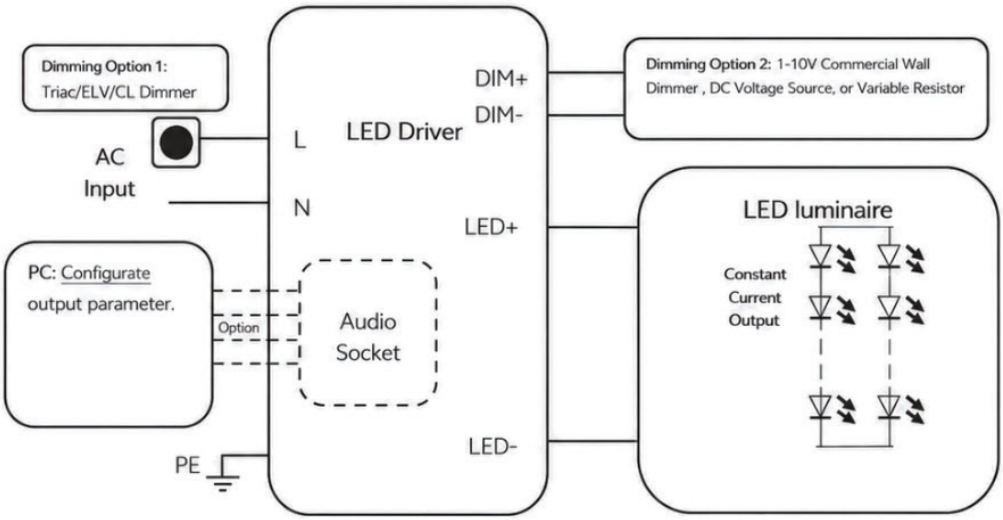

Programming Tools

Programming Interface	PGT-USB-TPAC-A	
Programming Cables	PGT-USB-AUDIO	

AFP-E1

DALI-2 or Tri-mode



Features & Benefits

- Extreme compact form factor
- Tri-mode dimming
- True 0.1% dimming over full output current range
  Ultra-wide Voltage Output : 5-55 VDC
- Universal AC Input Voltage (120-277VAC)
- High Power Density Design, White aluminum sheet metal case
- Comply with phase cut dimming and isolated 0-10V dimming
- Silicon potted for good thermal performance
- Suitable for indoor use
- Flicker free, excellent camera compatibility
- Combination Wave 2KV, Ringwave 2.5KV
- Comply with UL8750, IEEE1789

Programmable Features

- Output current(1mA step)
- Dim to off, Min Dimming Level
- Programmable conduction angles with
  turn-on & turn-off for TRIAC & ELV
- Dimming curve: Selectable Linear / Logarithmic
- OTP mode: Foldback mode, Linear decrease mode
- Dimming fade time(Soft start)
- Over load protection

Optional Function

- Side feed and bottom feed

Model List

Model	Rated Input Voltage	Max Output Power	Output Current	Rated Output Voltage	Dimming Control	Dimming Range	Efficiency	Dimension
AFP-E1-015D0600U-DALI-PC-S AFP-E1-015D0600U-DALI-PC-B	120-277VAC	15W	150-600mA	10-55VDC	DALI-2	0.1%	88%	111×30.5×24 mm 4.3×1.2×0.9 in.
AFP-E1-030D1200U-DALI-PC-S AFP-E1-030D1200U-DALI-PC-B	120-277VAC	30W	300-1200mA	10-55VDC	DALI-2	0.1%	88%	111×30.5×24 mm 4.3×1.2×0.9 in.
AFP-E1-050D1400U-DALI-PC-S AFP-E1-050D1400U-DALI-PC-B	120-277VAC	50W	500-1400mA	10-55VDC	DALI-2	0.1%	89%	111×30.5×24 mm 4.3×1.2×0.9 in.
AFP-E1-050S1400U-VT-PC-S AFP-E1-050S1400U-VT-PC-B	120-277VAC	50W	400-1400mA	5-55VDC	Tri-mode	0.1%	89%	111×30.5×24 mm 4.3×1.2×0.9 in.

Product Dimensions

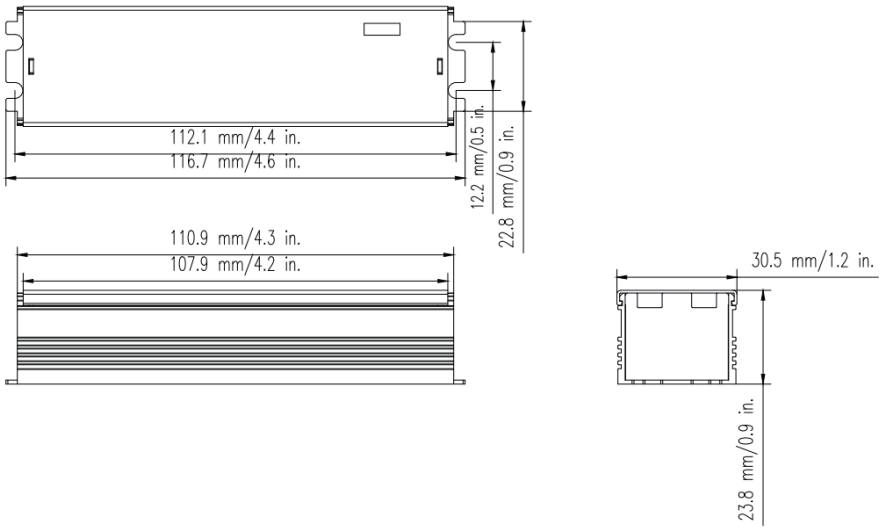

Wiring Diagram

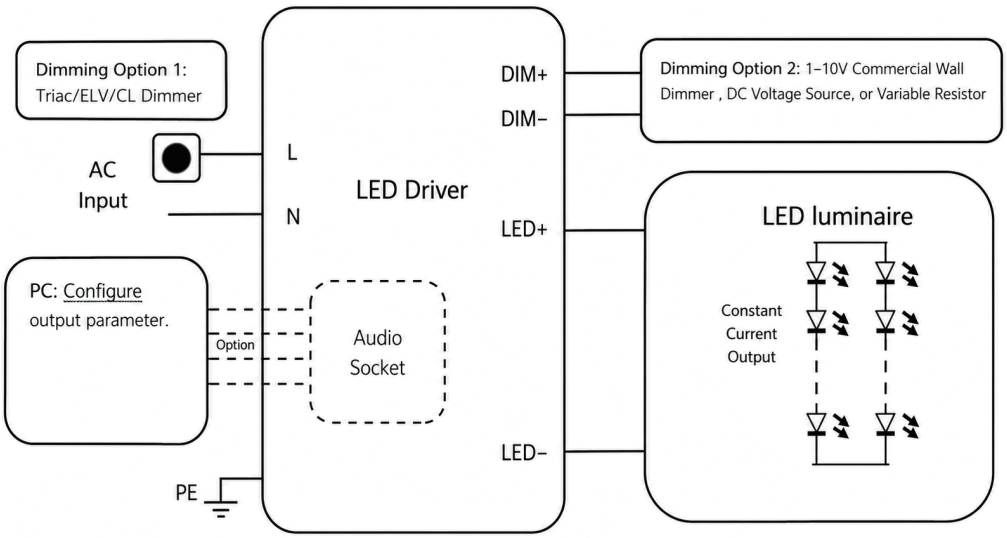

Programming Tools

Programming Interface	PGT-USB-TPAC-A	
Programming Cables	PGT-USB-M4P2	

Mini Integral



TRIAC DIMMING

0-10V

S:C

AFI-A1

TRIAC or 0-10V

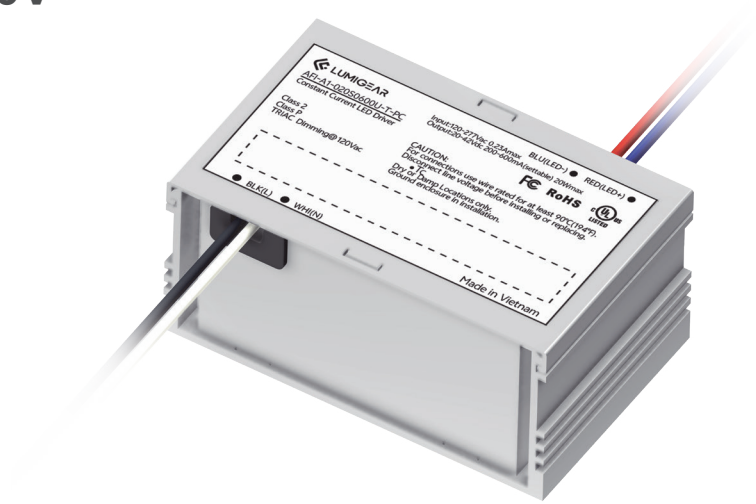

Features & Benefits

- Universal AC Input Voltage(120-277VAC, Triac dimming@120VAC)
- Compact design, silicone potted for better thermal performance
- Phase cut dimming, dimming down to 1%
- Suitable for indoor use
- UL Class2, Class P
- Combination Wave 2KV, Ringwave 2.5KV
- Operating temperature: -25℃~+55℃
- Comply with Title 24, UL8750
- Nominal lifetime up to 50,000 hours
- 5-year warranty

Programmable Features

- Output current(1mA step)
- Over Temperature Protection: Foldback mode, Linear decrease mode
- Programmable RMS voltage with turn-on , turn-off and full brightness

0/1-10V TRIAC DIMMING SiC c UL us LISTED P CLASS 2 CLASS

Model List

Model	Rated Input Voltage	Max Output Power	Output Current	Rated Output Voltage	Dimming Control	Dimming Range	Efficiency	Dimension
AFI-A1-010S0300U-V-PC	120-277VAC	10W	100-300mA	20-42VDC	0-10V	1-100%	87%	53×36×24.6 mm 2.1×1.4×0.9 in.
AFI-A1-020S0600U-V-PC	120-277VAC	20W	200-600mA	20-42VDC	0-10V	1-100%	89%	53×36×24.6 mm 2.1×1.4×0.9 in.
AFI-A1-010S0300U-T-PC	120-277VAC	10W	100-300mA	20-42VDC	TRIAC	1-100%	87%	53×36×24.6 mm 2.1×1.4×0.9 in.
AFI-A1-020S0600U-T-PC	120-277VAC	20W	200-600mA	20-42VDC	TRIAC	1-100%	89%	53×36×24.6 mm 2.1×1.4×0.9 in.

Product Dimensions

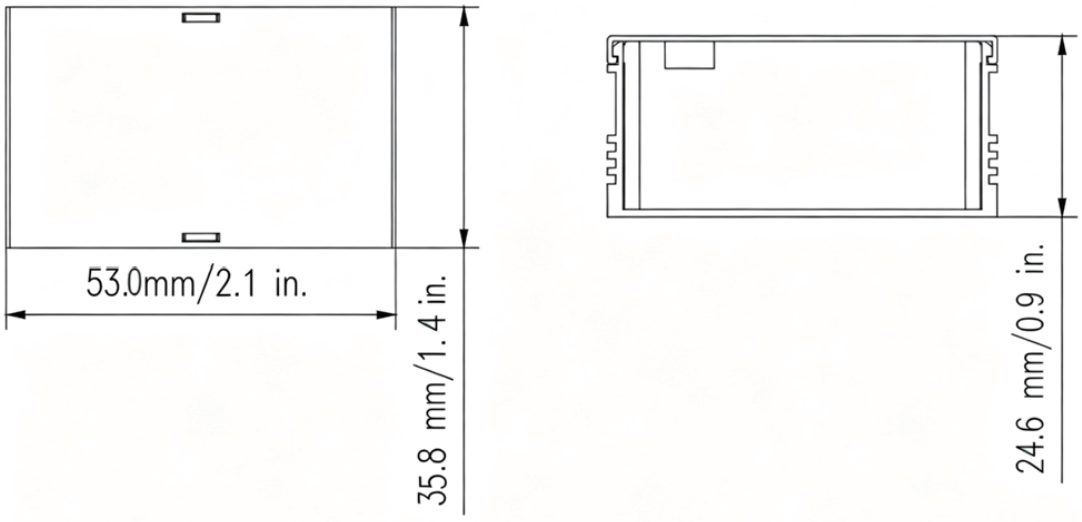

Wiring Diagram

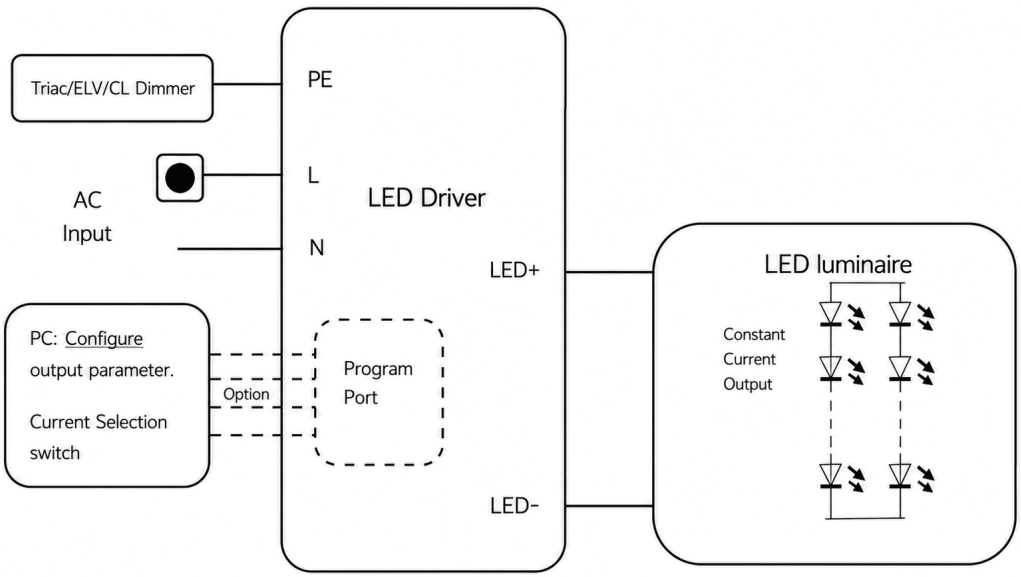

Programming Tools

Programming Interface	PGT-USB-TPAC-A	
Programming Cables	PGT-USB-M4P2	

AFI-V1

Features & Benefits

- Universal AC Input Voltage(120-277VAC)
- Compact design
- 88% high efficiency, low temperature rise
- Low ripple output
- IP20 rated case with silicone-based potting
- All-Round Protection: SCP, OVP, OPP(CC/CV Mode)
- UL Class2 output, Class P
- Operating temperature: -40℃~+55℃
- Comply with IEEE1789, UL8750
- Nominal lifetime up to 50,000 hours
- 5-year warranty



Model List

Model	Rated Input Voltage	Max Output Power	Output Current	Rated Output Voltage	Dimming Control	Dimming Range	Efficiency	Dimension
AFI-V1-024S012U-ND	120-277VAC	24W	0-2000mA	12VDC	N/A	N/A	87%	53×32.8×24.6 mm 2.1×1.3×0.9 in.
AFI-V1-024S024U-ND	120-277VAC	24W	0-1000mA	24VDC	N/A	N/A	87%	53×32.8×24.6 mm 2.1×1.3×0.9 in.
AFI-V1-024S048U-ND	120-277VAC	24W	0-500mA	48VDC	N/A	N/A	88%	53×32.8×24.6 mm 2.1×1.3×0.9 in.

Product Dimensions

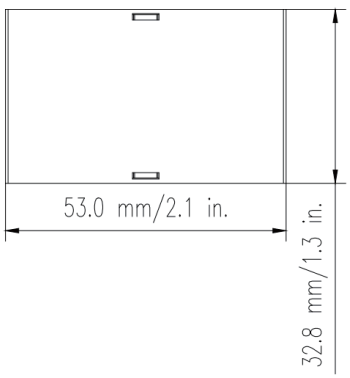

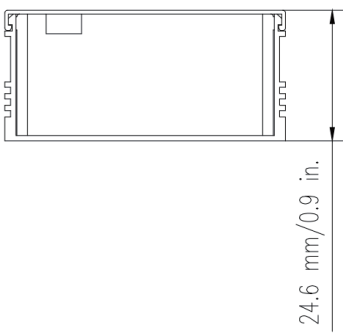

AFI-R1

Tri-mode

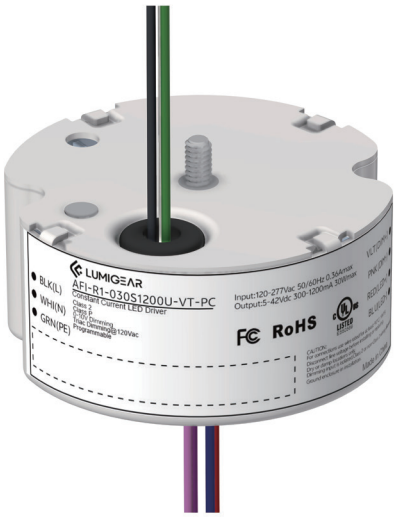

Features & Benefits

- Universal AC Input Voltage(120-277VAC)
- High Power Density Design
- Comply with phase cut dimming and isolated 0-10V dimming, dim down to true 1%
- Silicon potted for good thermal performance
- Suitable for indoor use
- Flicker free, excellent camera compatibility
- UL Class2, Class P
- Combination Wave 2KV, Ringwave 2.5KV
- Operating temperature: -25℃~+50℃
- Comply with IEEE1789, UL8750

Programmable Features

- Output current(1mA step)
- Dim to off, Min Dimming Level
- Programmable conduction angles with turn-on & turn-off for TRIAC & ELV
- Dimming curve: Selectable Linear / Logarithmic
- OTP mode: Foldback mode, Linear decrease mode
- Dimming fade time(Soft start)
- Over load protection

Tri mode | TRIAC | ELV | 0-10V

c UL us LISTED

P CLASS

2 CLASS

Model List

Model	Rated Input Voltage	Max Output Power	Output Current	Rated Output Voltage	Dimming Control	Dimming Range	Efficiency	Dimension
AFI-R1-015S0700U-VT-PC	120-277VAC	15W	150-700mA	5-42VDC	Tri-mode	1-100%	88%	D58*H27 mm D2.2*H1.0 in.
AFI-R1-030S1200U-VT-PC	120-277VAC	30W	300-1200mA	5-42VDC	Tri-mode	1-100%	89%	D58*H27 mm D2.2*H1.0 in.

Product Dimensions

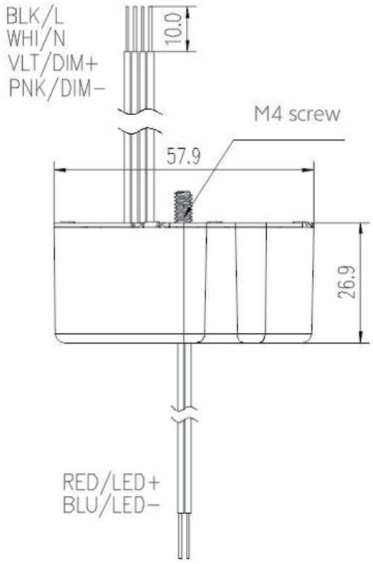

Wiring Diagram

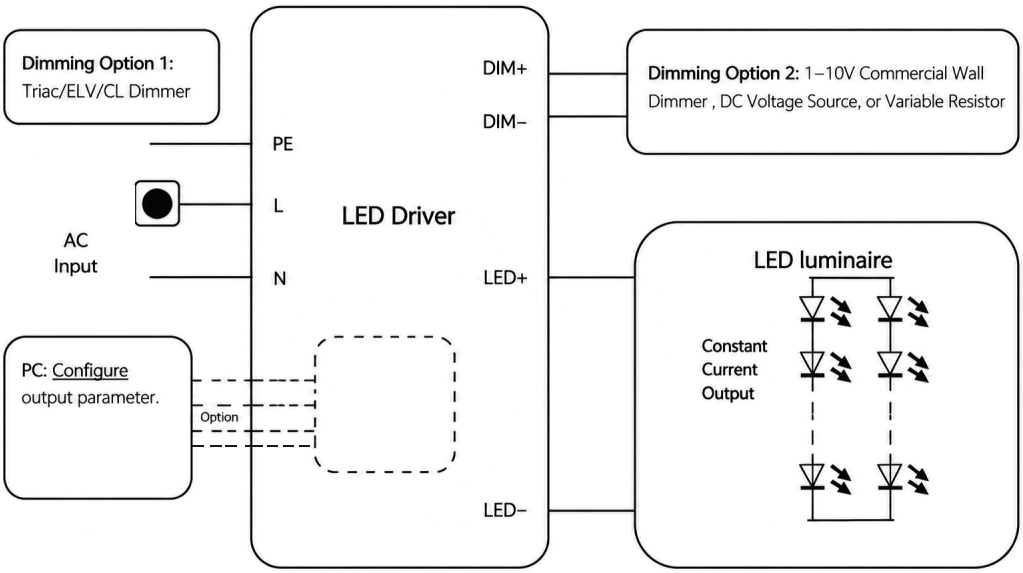

Programming Tools

Programming Interface	PGT-USB-TPAC-A	
Programming Cables	PGT-USB-AUDIO	

Slim Pencil

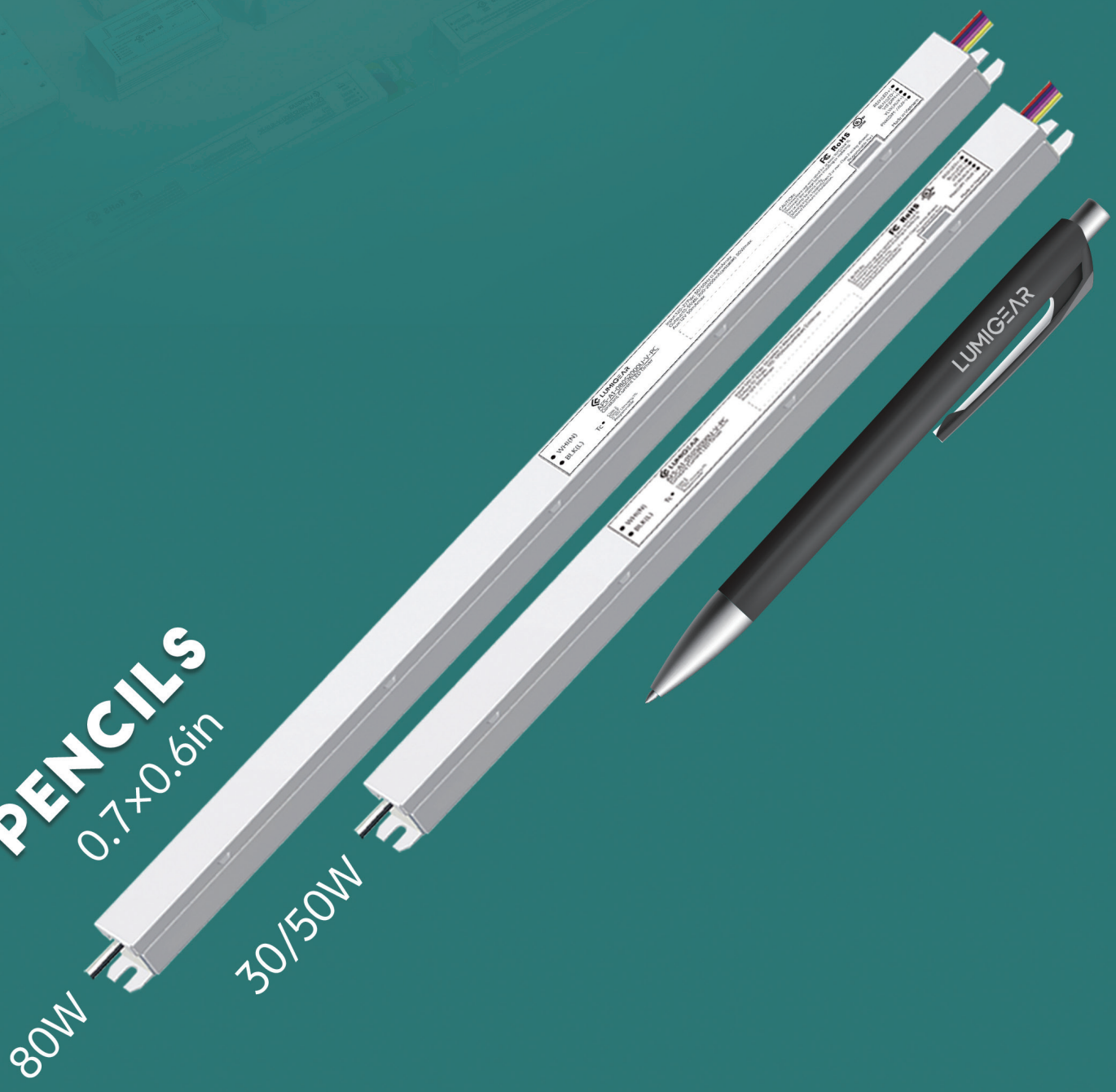

PENCILS
0.7×0.6in

80W

30/50W

DALI 2

0-10V

GaN SiC

AFS-A1/B1/C1/D1

DALI-2 or 0-10V



Features & Benefits

- 0.7 inches wide×0.6 inches high
- True 1% dimming over full output current range
- Wide current range coverage: 85-2000 mA
- Wide power range coverage: 30-80 W
- Linear form factor, metal sheet case(white), side feed
- Isolated 0-10V dimming interface
- DALI-2 Standard: IEC62386-101{ed2.0}-2014, IEC62386-102{ed2.0}-2014, IEC62386-207{ed2.0}-2018, IEC62386-209{ed1.0}-2011
- Support DALI-2 Part: 250 251 252 253
- Low standby power: <0.5W@120VAC
- Suitable for indoor use
- Flicker-free, excellent camera compatibility, spec-grade smoothness
- Nominal lifetime up to 50,000 hours
- 5-year warranty

Programmable Features

- Output current, dim to off, min dimming level
- OTP point of driver, luminous decay compensation,
- End-of-life indicator, fade in time, overload protection point
- Dimming curve: log/linear/square dimming curves
- Selectable dimming modes: solo dimming,warm dimming,tunable white,dual dimming,DT8 dimming.

Optional Function

- Aux power: 12V/50mA

DALI 2 | D4i | DT6 | DT8 | 0/1-10V | GaN | SiC | c UL us LISTED | P CLASS | 2 CLASS

Model List

Model	Rated Input Voltage	Max Output Power	Output Current	Rated Output Voltage	Dimming Control	Dimming Range	Efficiency	Dimension
AFS-A1-030S0850U-V-AUX-PC AFS-A1-030D0850U-V-AUX-PC AFS-B1-030D0850U-DALI-PC AFS-C1-030D0850U-DALI-PC AFS-D1-030D0850U-DALI-PC	120-277VAC	30W	300-850mA	5-55V/10-55V	0-10V/2*0-10V DT6/DT8/D4i	1-100%	88%	244×18.2×16 mm 9.6×0.7×0.6 in.
AFS-A1-050S1200U-V-AUX-PC AFS-A1-050D1200U-V-AUX-PC AFS-B1-050D1200U-DALI-PC AFS-C1-050D1200U-DALI-PC AFS-D1-050D1200U-DALI-PC	120-277VAC	50W	500-1200mA	5-55V/10-55V	0-10V/2*0-10V DT6/DT8/D4i	1-100%	89%	244×18.2×16 mm 9.6×0.7×0.6 in.
AFS-A1-080S2000U-V-AUX-PC AFS-A1-080D2000U-V-AUX-PC AFS-B1-080D2000U-DALI-PC AFS-C1-080D2000U-DALI-PC AFS-D1-080D2000U-DALI-PC	120-277VAC	80W	800-2000mA	5-55V/10-55V	0-10V/2*0-10V DT6/DT8/D4i	1-100%	91%	355.7×18.2×16 mm 14×0.7×0.6 in.

Product Dimensions

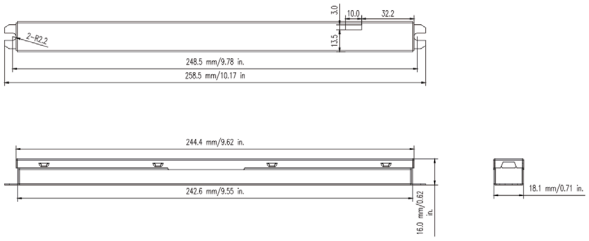

30W/50W

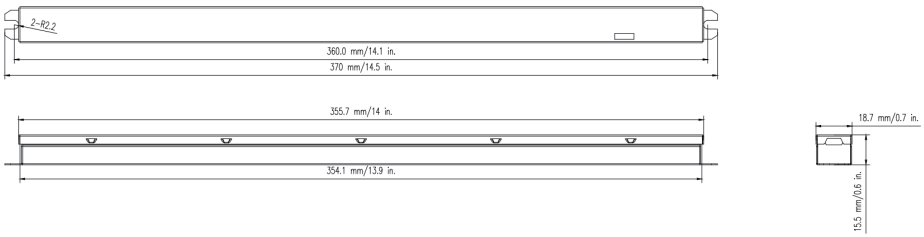

80W

Wiring Diagram

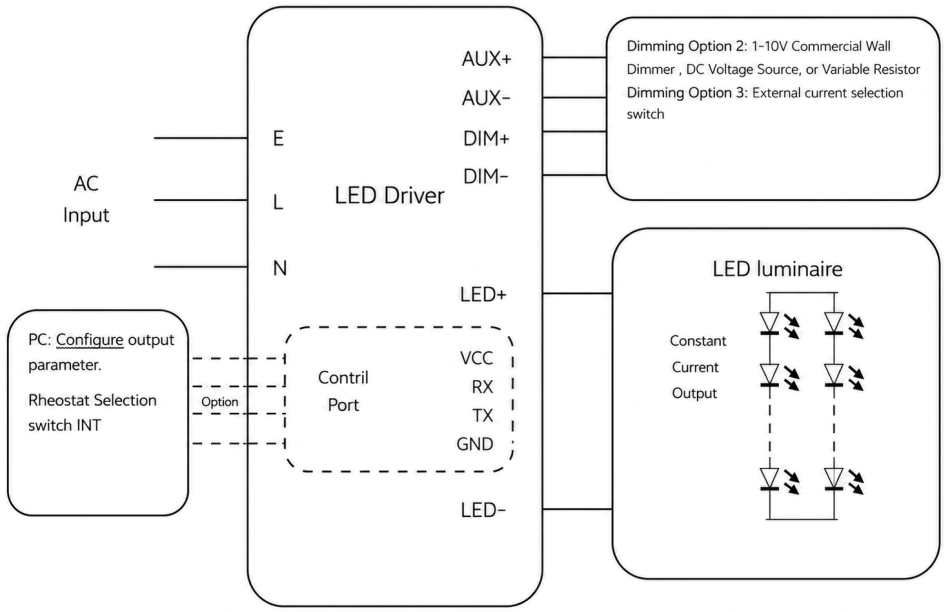

Programming Tools

Programming Interface	PGT-USB-TPAC-A	
Programming Cables	PGT-USB-M4P2	

Compact & Linear Duo

25W

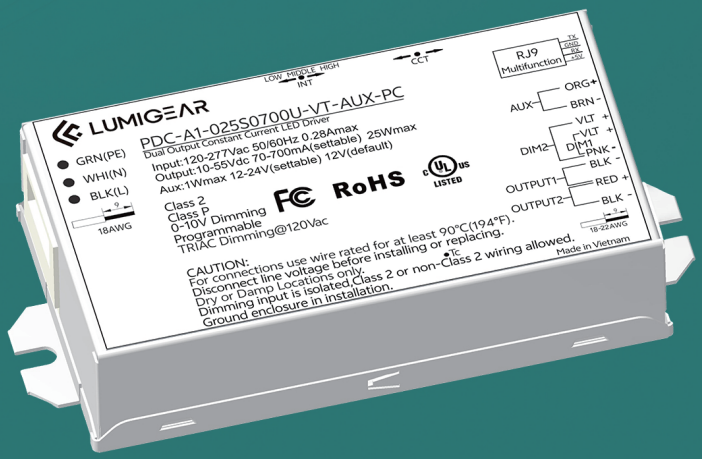

85W

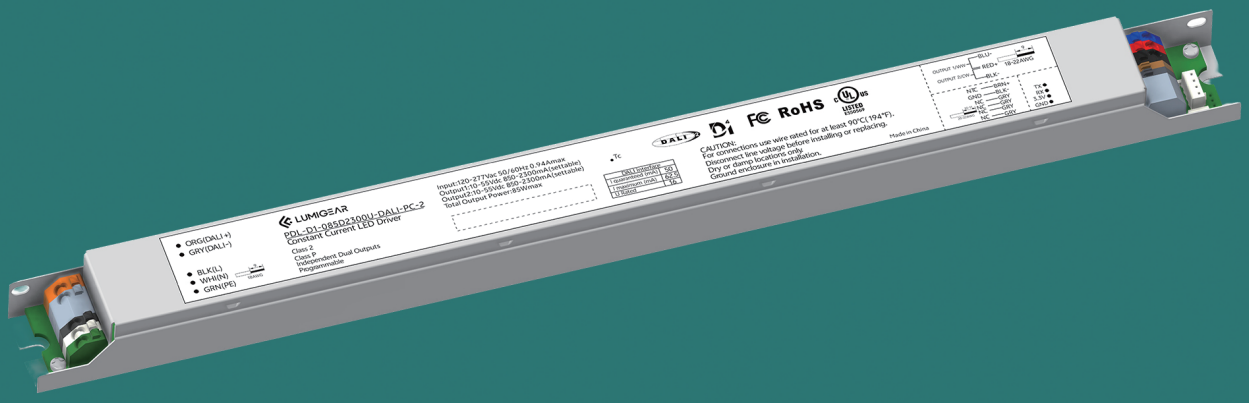

DALI 2

Di 4™

Tri mode — TRIAC | ELV | 0-10V

CCT DUAL OUTPUT

PDC-A1

Tri-mode

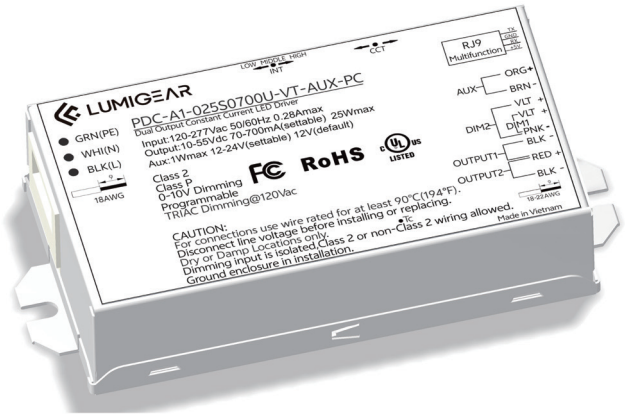

Features & Benefits

- Tri-mode dimming: 0-10V,1-10V,MLV,ELV,TRIAC
- Wide current range coverage: 70-1500 mA
- Wide voltage range coverage: 10-55 VDC
- Compact form factor, metal sheet case(white)
- TRIAC dimming + isolated 0-10V dimming , dimming down to true 1%
- Suitable for indoor use
- Nominal lifetime up to 50,000 hours
- 5-year warranty

Programmable Features

- Output current, dim to off, min dimming level
- Log/linear/square dimming curves
- OTP point of driver, LED thermal protection, luminous decay compensation
- Output voltage of aux power

Optional Functions

- Aux power: 12-24V programmable,1W
- Built-in 3 current adjustment by INT switch
- Built-in 3/4/5CCT switch
- Mounting feet or stud type
- Digital and analog interface ready

Model List

Model	Rated Input Voltage	Max Output Power	Output Current	Rated Output Voltage	Dimming Control	Dimming Range	Efficiency	Dimension
PDC-A1-025S0700a-VT-b-PC-c-d	120-277VAC 120-347VAC	25W	70-700mA	10-55VDC	Tri-mode	1-100%	88%	107.5×60.3×27.5 mm 4.2×2.3×1.1 in
PDC-A1-040S1200a-VT-b-PC-c-d	120-277VAC 120-347VAC	40W	120-1200mA	10-55VDC	Tri-mode	1-100%	88.5%	107.5×60.3×27.5 mm 4.2×2.3×1.1 in
PDC-A1-055S1500a-VT-b-PC-c-d	120-277VAC 120-347VAC	55W	150-1500mA	10-55VDC	Tri-mode	1-100%	89.5%	107.5×60.3×27.5 mm 4.2×2.3×1.1 in

a=U/M
U:120-277VAC
M:120-347VAC

b=BLANK/AUX
BLANK:without aux output
AUX:with aux output

c=A,B,C,D
A:without INT and CCT Switch
B:with INT Switch
C:with CCT Switch
D:with INT+CCT Switch

d=BLANK/M
BLANK:Stud type
M:Mounting feet

Product Dimensions

S TYPE:

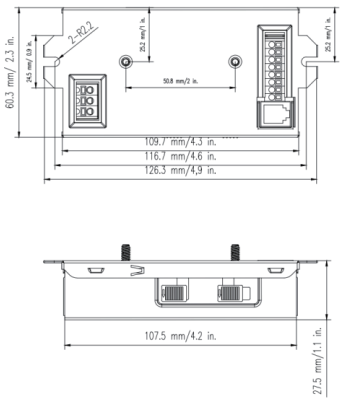

M TYPE:

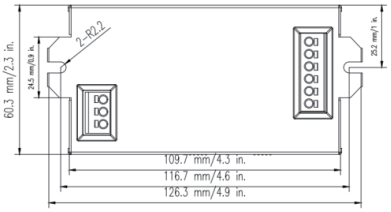

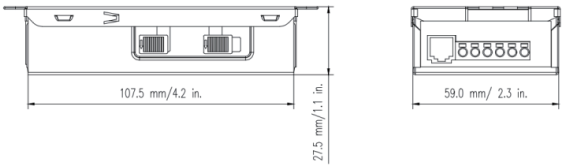

Wiring Diagram

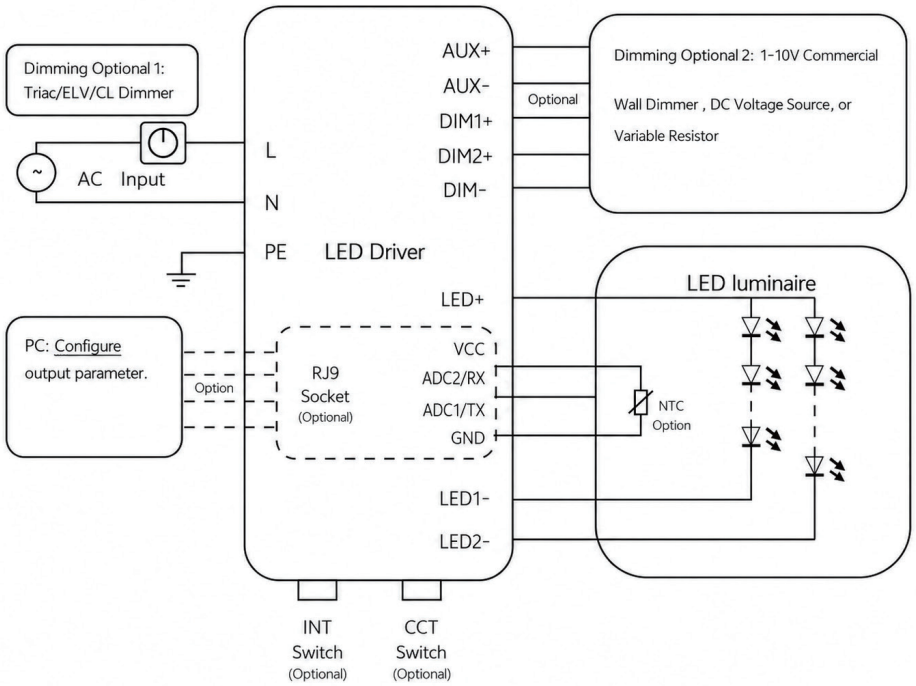

Programming Tools

Programming Interface	PGT-USB-TPAC-A	
Programming Cables	PGT-USB-RJ9	

PDL-D1/A1

DALI-2 or Dual-channel 0-10V

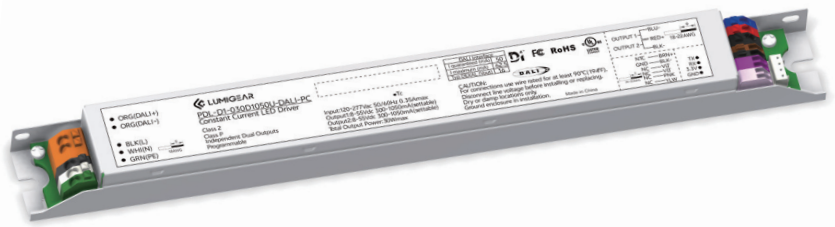

Features & Benefits

- Wide current range coverage: 140-2300 mA
- Wide voltage range coverage: 8-55 VDC
- Linear form factor, metal sheet case(white), side feed
- Dimmable built-in constant current independent dual outputs LED driver, dimming down to true 1%.
- DALI-2 Standard: IEC62386-101{ed2.0}-2014, IEC62386-102{ed2.0}-2014, IEC62386-207{ed2.0}-2018, IEC62386-209{ed1.0}-2011
- Support DALI-2 Part: 250 251 252 253
- Low standby power: <0.7W@120VAC
- Suitable for indoor use
- Nominal lifetime up to 50,000 hours
- 5-year warranty

Programmable Features

- Output current
- Colour temperature range
- OTP point, luminous decay compensation, LED thermal protection(NTC)
- Overload protection point
- Dimming curve: log/linear
- Selectable dimming modes: solo dimming, warm dimming, tunable white, dual dimming, DT8 dimming.

Model List

Model	Rated Input Voltage	Max Output Power	Output Current	Rated Output Voltage	Dimming Control	Dimming Range	Efficiency	Dimension
PDL-D1-030D1400a-DALI-PC PDL-A1-030D1400a-V-b-PC	120-277VAC 120-347VAC	30W	0-10V:140-1400mA DALI:300-1050mA	8-55VDC	DT6 DT8 D4i 0-10V	1-100%	89%	280×30×21.5 mm 11.0×1.2×0.8 in.
PDL-D1-050D1400a-DALI-PC PDL-A1-050D1400a-V-b-PC	120-277VAC 120-347VAC	50W	0-10V:140-1400mA DALI:500-1400mA	8-55VDC	DT6 DT8 D4i 0-10V	1-100%	89%	280×30×21.5 mm 11.0×1.2×0.8 in.
PDL-D1-085D2300a-DALI-PC-e PDL-A1-085D2300a-V-b-PC-e	120-277VAC 120-347VAC	85W	0-10V:230-2300mA DALI:850-2300mA	10-55VDC	DT6 DT8 D4i 0-10V	1-100%	90%	380×30×25.4 mm 14.9×1.2×1.0 in.

a=U/M
U:120-277VAC
M:120-347VAC

b=BLANK/AUX
BLANK:without aux output
AUX:with aux output

e=2 to 10 Default to 2
which indicates surge protection level,
eg:2 indicate 2kV

Product Dimensions

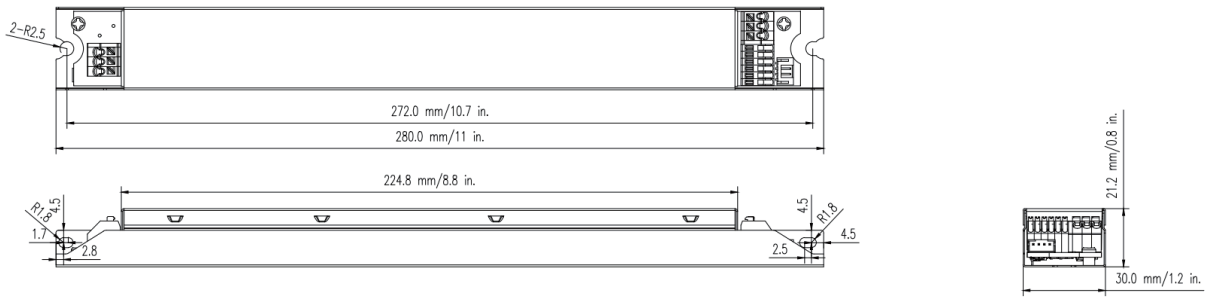

Wiring Diagram

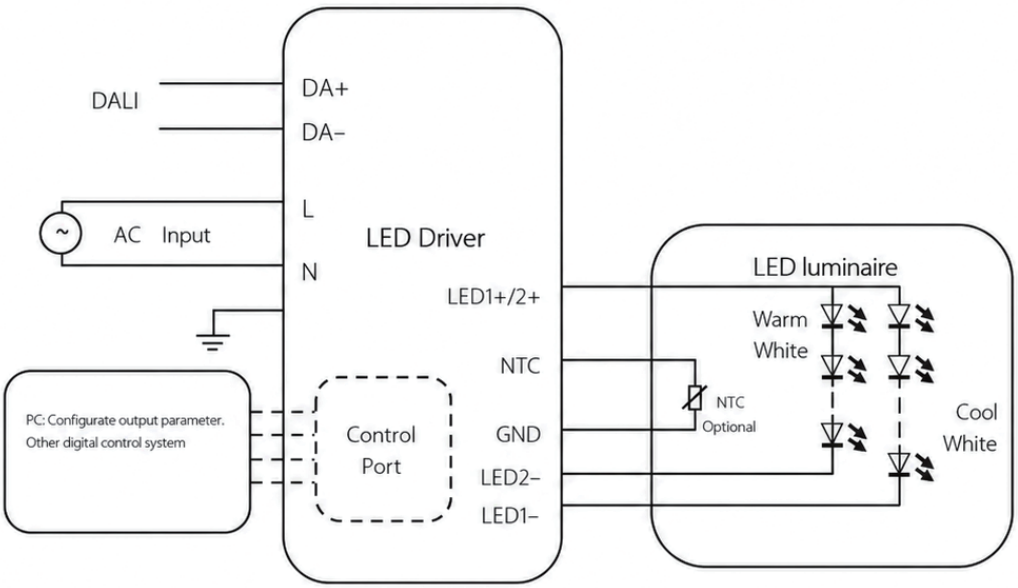

Programming Tools

Programming Interface	PGT-USB-TPAC-A	
Programming Cables	PGT-USB-P254	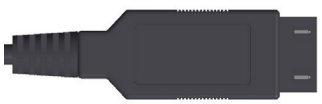

Compact & Linear

25W

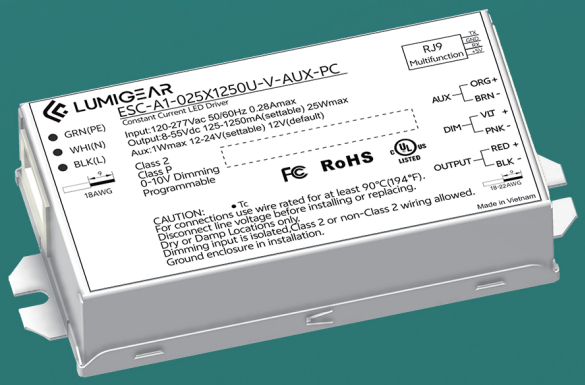

30W

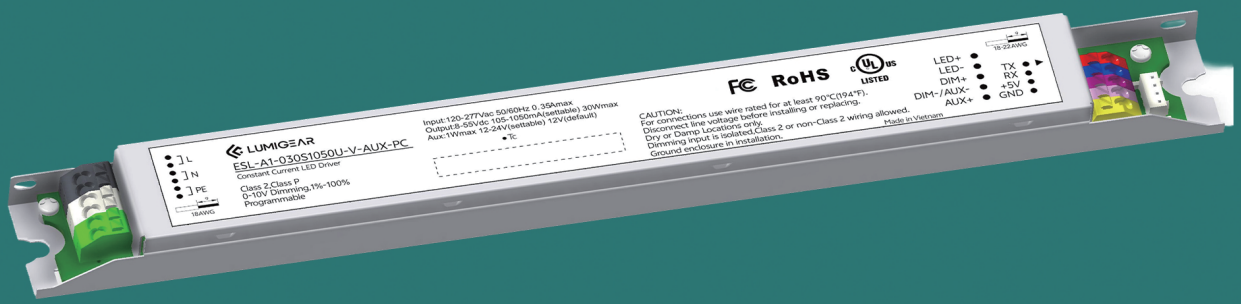

50W

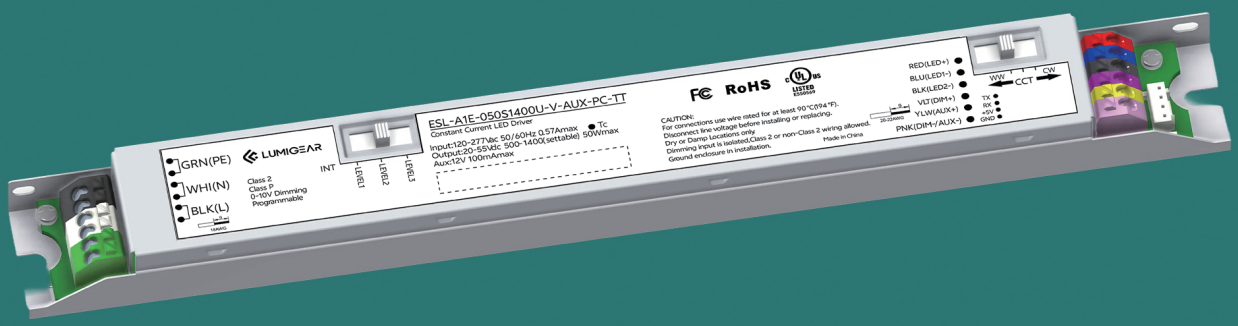

0-10V

CCT

DIP

ESC-B1

Dual-channel 0-10V

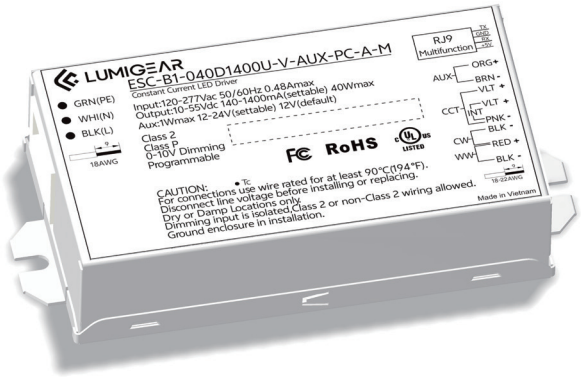

Features & Benefits

- Wide current range coverage: 125-2000 mA
- Wide voltage range coverage: 10-55 VDC
- Compact form factor, metal sheet case
- Two Isolated 0-10V dimming Interfaces, dimming down to true 1%
- Flicker-free, excellent camera compatibility
- Nominal lifetime up to 50,000 hours
- 5-year warranty

Programmable Features

- Output current, dim to off, min dimming level, output voltage of aux power
- OTP point of driver , LED thermal protection
- End-of-life indicator, fade in time, overload protection point
- Log/linear/square dimming curves
- Selectable dimming modes: warm dimming, tunable white, and solo dimming

Optional Functions

- Aux power: 12-24V programmable,1W
- Built-in current adjustment by 3INT switch
- Built-in 5CCT switch
- Mounting feet or stud type
- Digital and analog interface ready

0/1-10V c UL us LISTED P CLASS 2 CLASS

Model List

Model	Rated Input Voltage	Max Output Power	Output Current	Rated Output Voltage	Dimming Control	Dimming Range	Efficiency	Dimension
ESC-B1-025D1250a-V-b-PC-c-d	120-277VAC 120-347VAC	25W	125-1250mA	10-55VDC	0-10V	1-100%	87%	107.5×60.3×27.5 mm 4.2×2.3×1.1 in.
ESC-B1-040D1400a-V-b-PC-c-d	120-277VAC 120-347VAC	40W	140-1400mA	10-55VDC	0-10V	1-100%	89%	107.5×60.3×27.5 mm 4.2×2.3×1.1 in.
ESC-B1-055D2000a-V-b-PC-c-d	120-277VAC 120-347VAC	55W	200-2000mA	10-55VDC	0-10V	1-100%	89%	107.5×60.3×27.5 mm 4.2×2.3×1.1 in.

a=U/M
U:120-277VAC
M:120-347VAC

b=BLANK/AUX
BLANK:without aux output
AUX:with aux output

c=A,B,C,D
A:without INT and CCT Switch
B:with INT Switch
C:with CCT Switch
D:with INT+CCT Switch

d=BLANK/M
BLANK:Stud type
M:Mounting feet

Product Dimensions

S TYPE:

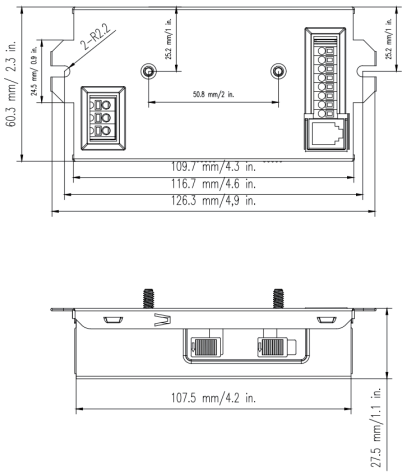

M TYPE:

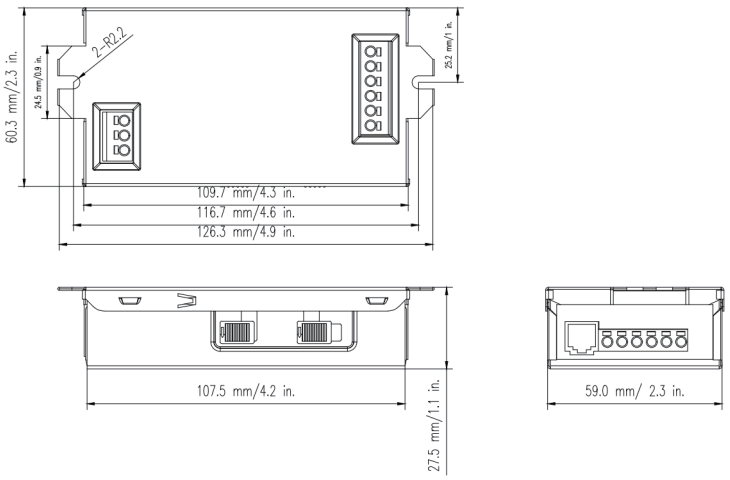

Wiring Diagram

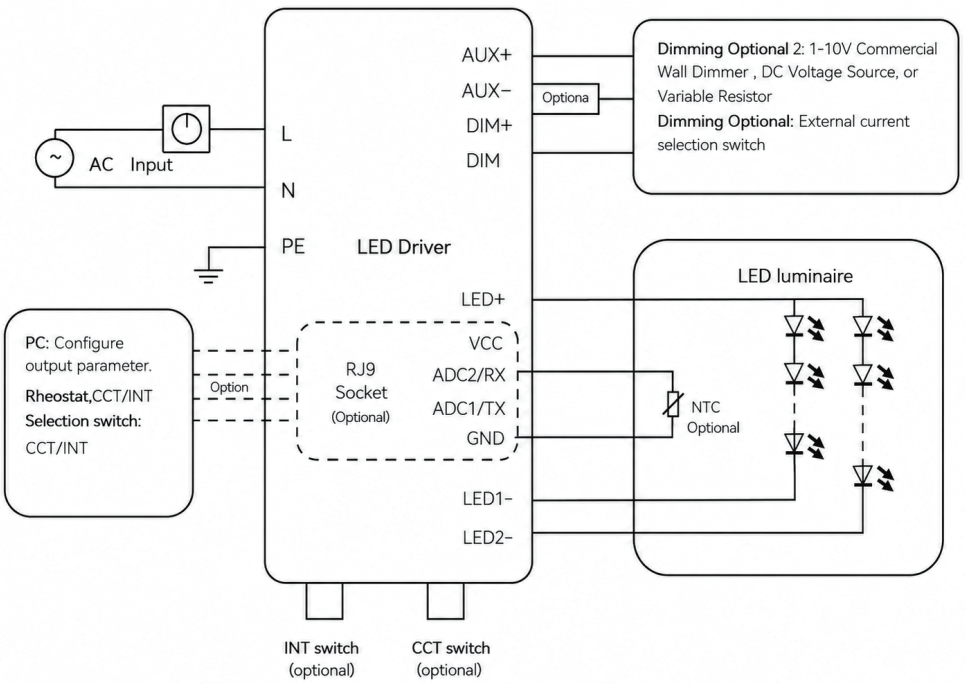

Programming Tools

Programming Interface	PGT-USB-TPAC-A	
Programming Cables	PGT-USB-RJ9	

ESC-A1

0-10V

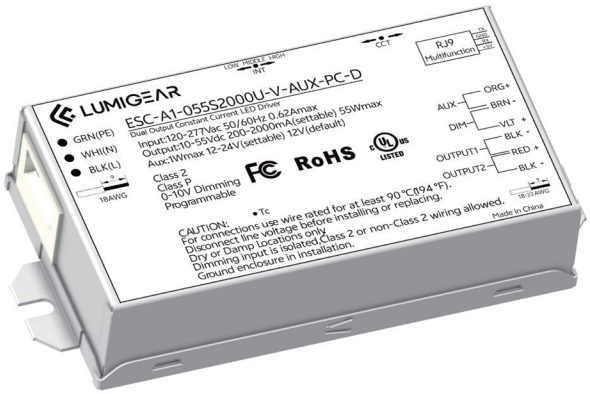

Features & Benefits

- Wide current range coverage: 125-2000 mA
- Wide voltage range coverage: 8-55 VDC
- Compact form factor, metal sheet case
- Isolated 0-10V dimming, dimming down to true 1%
- Suitable for indoor use
- Flicker-free, excellent camera compatibility
- Nominal lifetime up to 50,000 hours
- 5-year warranty

Programmable Features

- Output current, dim to off, min dimming level, output voltage of aux power
- OTP point of driver, LED thermal protection, luminous decay compensation
- End-of-life indicator, fade in time, overload protection point

Optional Functions

- Aux power: 12-24V programmable, 1W
- Built-in 3 current adjustment by INT switch
- Built-in 3CCT switch
- Mounting feet or stud type
- Digital and analog interface ready

Model List

Model	Rated Input Voltage	Max Output Power	Output Current	Rated Output Voltage	Dimming Control	Dimming Range	Efficiency	Dimension
ESC-A1-025S1250a-V-b-PC-c-d	120-277VAC 120-347VAC	25W	125-1250mA	8-55VDC	0-10V	1-100%	89%	107.5×60.3×27.5 mm 4.2×2.3×1.1 in.
ESC-A1-040S1400a-V-b-PC-c-d	120-277VAC 120-347VAC	40W	140-1400mA	8-55VDC	0-10V	1-100%	90%	107.5×60.3×27.5 mm 4.2×2.3×1.1 in.
ESC-A1-055S2000a-V-b-PC-c-d	120-277VAC 120-347VAC	55W	200-2000mA	10-55VDC	0-10V	1-100%	90%	107.5×60.3×27.5 mm 4.2×2.3×1.1 in.

a=U/M
U:120-277VAC
M:120-347VAC

b=BLANK/AUX
BLANK:without aux output
AUX:with aux output

c=A,B,C,D
A:without INT and CCT Switch
B:with INT Switch
C:with CCT Switch
D:with INT+CCT Switch

d=BLANK/M
BLANK:Stud type
M:Mounting feet

Product Dimensions

S TYPE:

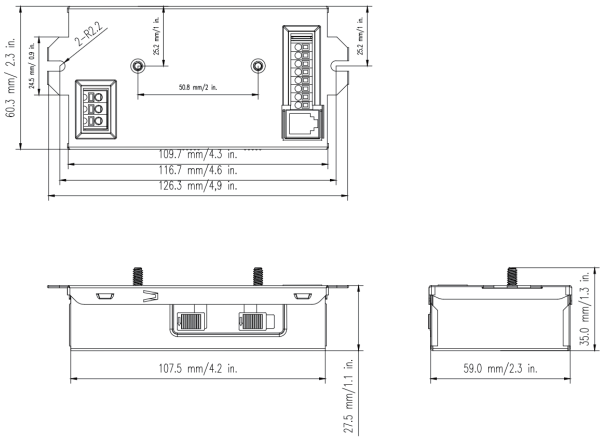

M TYPE:

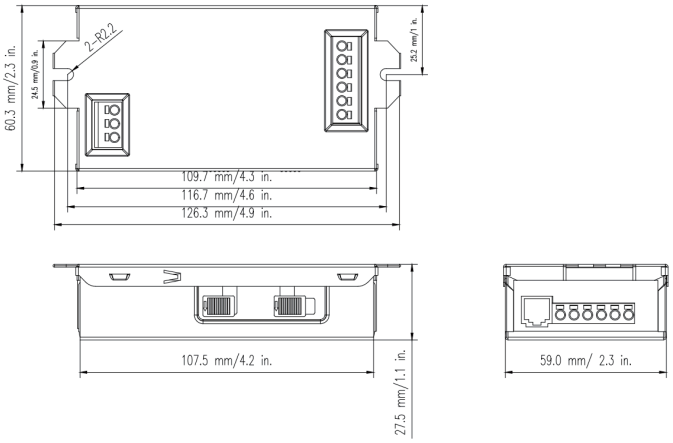

Wiring Diagram

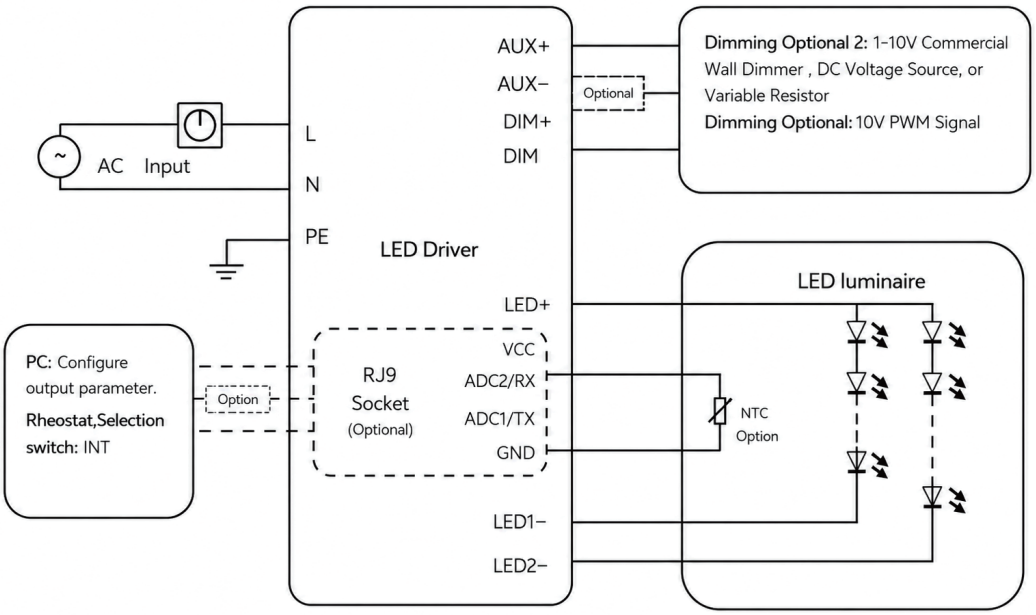

Programming Tools

Programming Interface	PGT-USB-TPAC-A	
Programming Cables	PGT-USB-RJ9	

ESL-A1

0-10V

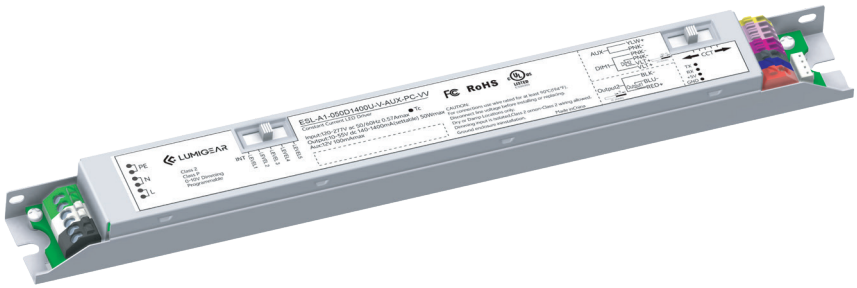

Features & Benefits

- Wide current range coverage: 105-2800 mA
- Wide voltage range coverage: 8-55 VDC
- Linear form factor, metal sheet case(white), side feed
- Isolated 0-10V dimming interface, dimming down to true 1%
- Low standby power: <0.7W@120VAC
- Suitable for indoor use
- Flicker-free, excellent camera compatibility, spec-grade smoothness
- Nominal lifetime up to 50,000 hours
- 5-year warranty

Programmable Features

- Output current, dim to off, min dimming level
- OTP point of driver, LED module thermal protection, luminous decay compensation,
- End-of-life indicator, fade in time, overload protection point
- Dimming curve: log/linear/square dimming curves

Optional Functions

- Aux power, 100mA/12V
- Built-in programmable 3/4/5INT and 3/4/5CCT selection switch(030D 050D ONLY)

0/1-10V c UL us LISTED P CLASS 2 CLASS

Model List

Model	Rated Input Voltage	Max Output Power	Output Current	Rated Output Voltage	Dimming Control	Dimming Range	Efficiency	Dimension
ESL-A1-030S1050a-V-b-PC	120-277VAC 120-347VAC	30W	105-1050mA	8-55VDC	0-10V	1-100%	87%	280×30×21.5 mm 11.0×1.2×0.8 in.
ESL-A1-050S1400a-V-b-PC	120-277VAC 120-347VAC	50W	140-1400mA	8-55VDC	0-10V	1-100%	89%	280×30×21.5 mm 11.0×1.2×0.8 in.
ESL-A1-085S2300a-V-b-PC-e	120-277VAC 120-347VAC	85W	230-2300mA	10-55VDC	0-10V	1-100%	90%	380×30×25.4 mm 14.9×1.2×1.0 in.
ESL-A1-096S2800a-V-b-PC-e	120-277VAC 120-347VAC	96W	280-2800mA	10-55VDC	0-10V	1-100%	91.5%	380×30×25.4 mm 14.9×1.2×1.0 in.
ESL-A1-030D1050a-V-b-PC-fg	120-277VAC 120-347VAC	30W	105-1050mA	10-55VDC	2*0-10V	1-100%	87%	280×30×21.5 mm 11.0×1.2×0.8 in.
ESL-A1-050D1400a-V-b-PC-fg	120-277VAC 120-347VAC	50W	140-1400mA	10-55VDC	2*0-10V	1-100%	89%	280×30×21.5 mm 11.0×1.2×0.8 in.

a=U/M
U:120-277VAC
M:120-347VAC

b=BLANK/AUX
BLANK:without aux output
AUX:with aux output

e=2 to 10 Default to 2
which indicates surge protection level,
eg:2 indicate 2kV

f=BLANK/T/F/V
BLANK:without INT switch
T:with 3INT switch
F:with 4INT switch
V:with 5INT switch

g=BLANK/T/F/V
BLANK:without CCT switch
T:with 3CCT switch
F:with 4CCT switch
V:with 5CCT switch

Product Dimensions

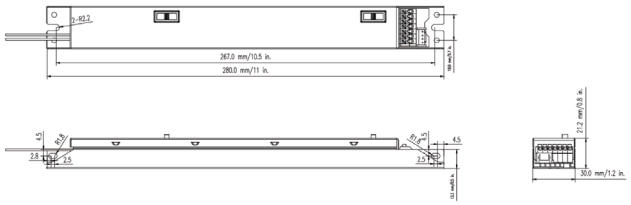

30W/50W

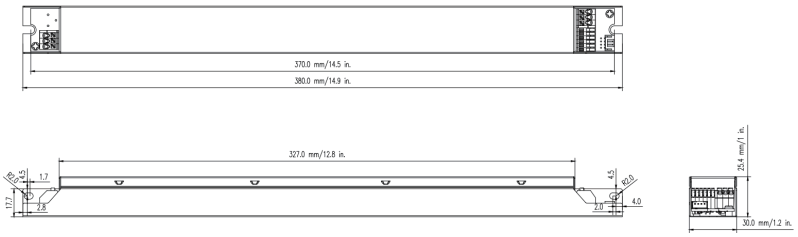

85W/96W

Wiring Diagram

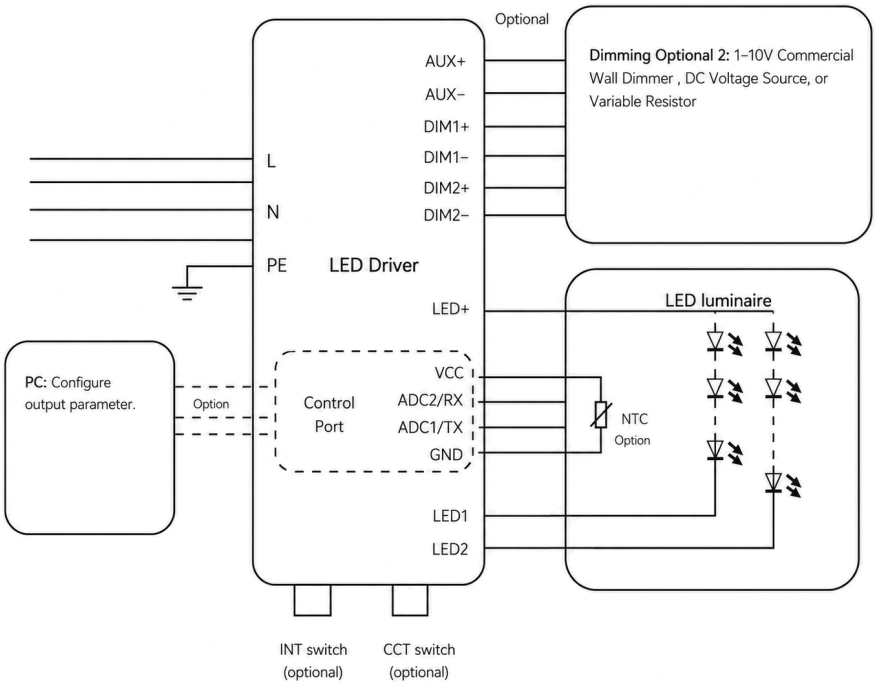

Programming Tools

Programming Interface	PGT-USB-TPAC-A	
Programming Cables	PGT-USB-P254	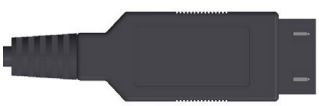

ESL-A1E

0-10V

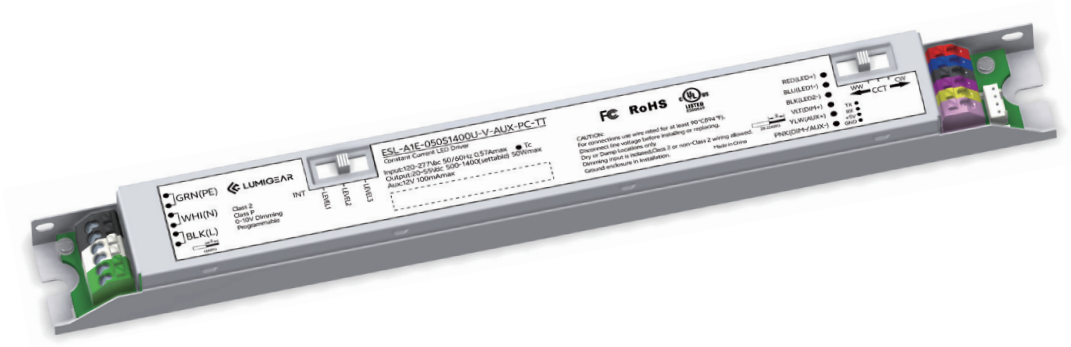

Features & Benefits

- Universal AC Input Voltage(120-277VAC/120-347VAC)
- Linear form factor, Side feed, Metal sheet case(White)
- One Isolated 0-10V dimming interface, dim down to true 1%
- Low standby power, <0.6W@120VAC
- Flicker-free, excellent camera compatibility, spec-grade smoothness
- Suitable for indoor use
- Comply with UL8750 Class 2, IEEE1789,

Programmable Features

- Output current at each position of INT switch, Dim to off, Min Dimming Level
- LED Thermal Protection

Optional Functions

- Aux power, 100mA/12V
- Built-in 3INT and 3CCT selection switch

0/1-10V c UL us LISTED P CLASS 2 CLASS

Model List

Model	Rated Input Voltage	Max Output Power	Output Current	Rated Output Voltage	Dimming Control	Dimming Range	Efficiency	Dimension
ESL-A1E-030S1050a-V-b-PC-fg	120-277VAC 120-347VAC	30W	300-1050mA	20-50VDC	0-10V	1-100%	88%	280×30×21.5 mm 11.0×1.2×0.8 in.
ESL-A1E-050S1400a-V-b-PC-fg	120-277VAC 120-347VAC	50W	500-1400mA	20-50VDC	0-10V	1-100%	88%	280×30×21.5 mm 11.0×1.2×0.8 in.

a=U/M
U:120-277VAC
M:120-347VAC

b=BLANK/AUX
BLANK:without aux output
AUX:with aux output

f=BLANK/T
BLANK:without INT switch
T:with 3INT switch

g=BLANK/T
BLANK:without CCT switch
T:with 3CCT switch

Product Dimensions

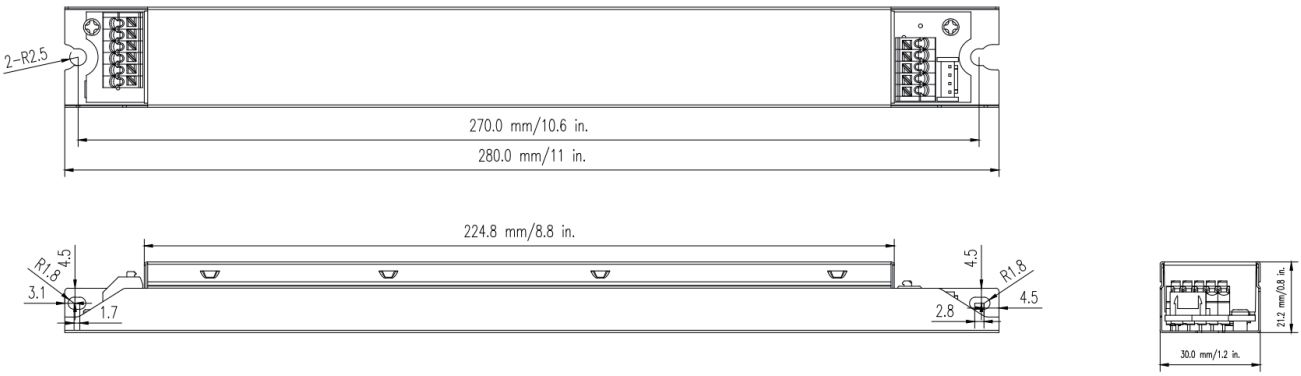

Wiring Diagram

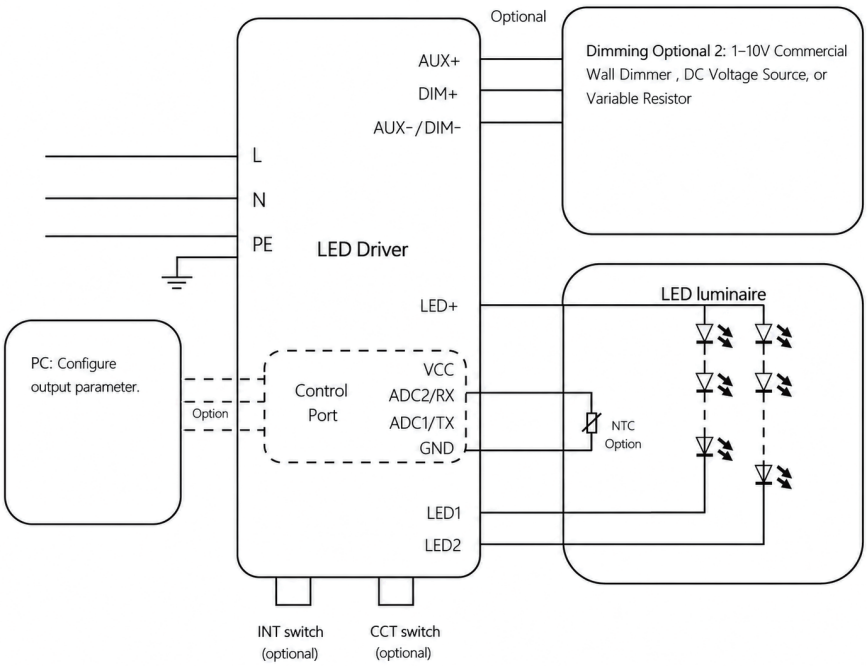

Programming Tools

Programming Interface	PGT-USB-TPAC-A	
Programming Cables	PGT-USB-P254	

Constant Voltage



IP 65

Tri mode | TRIAC | ELV | 0-10V

12 V 48

CVJ-A1

Tri-mode



Features & Benefits

- Compact Design, 30% smaller than conventional enclosures.
- High Efficiency up to 94%
- 24V-48V output voltage options
- Tri-mode dimming: 0-10V,1-10V,MLV,ELV,TRIAC
- Field or factory installation
- Dry, damp and wet location design for indoor and outdoor installations
- Built-in APFC
- Isolated 0-10V dimming, dimming down to 0.1%
- Complies with leading-edge/trailing-edge dimmer
- Wide load range from 10% to 100%(TRIAC Dimming)

Programmable Features

- Flicker-free, excellent camera compatibility, spec-grade smoothness
- All-round protection: SCP, OVP, OTP, OPP(CC/CV mode, especially suitable for LED strip)
- Constant voltage PWM style output
- Nominal lifetime up to 50,000 hours
- 5-year warranty

Optional Functions

- Input voltage: 120-277VAC or 120-347VAC
- Aux power, 12V/50mA

Model List

Model	Rated Input Voltage	Max Output Power	Output Current	Rated Output Voltage	Dimming Control	Dimming Range	Efficiency	Dimension
CVJ-A1-096S024a-VT CVJ-A1-096S036a-VT CVJ-A1-096S048a-VT	120-277VAC 120-347VAC	96W	0-4000mA 0-2666mA 0-2000mA	24VDC 36VDC 48VDC	Tri-mode	0.1%	91%	203.6×71.7×35.3 mm 8×2.8×1.4 in.
CVJ-A1-192D024a-VT CVJ-A1-192D036a-VT CVJ-A1-192D048a-VT	120-277VAC 120-347VAC	2*96W	2*(0-4000)mA 2*(0-2666)mA 2*(0-2000)mA	24VDC 36VDC 48VDC	Tri-mode	0.1%	91%	230×115.6×40 mm 9×4.5×1.5 in.

a=U/M
U:120-277VAC
M:120-347VAC

Product Dimensions

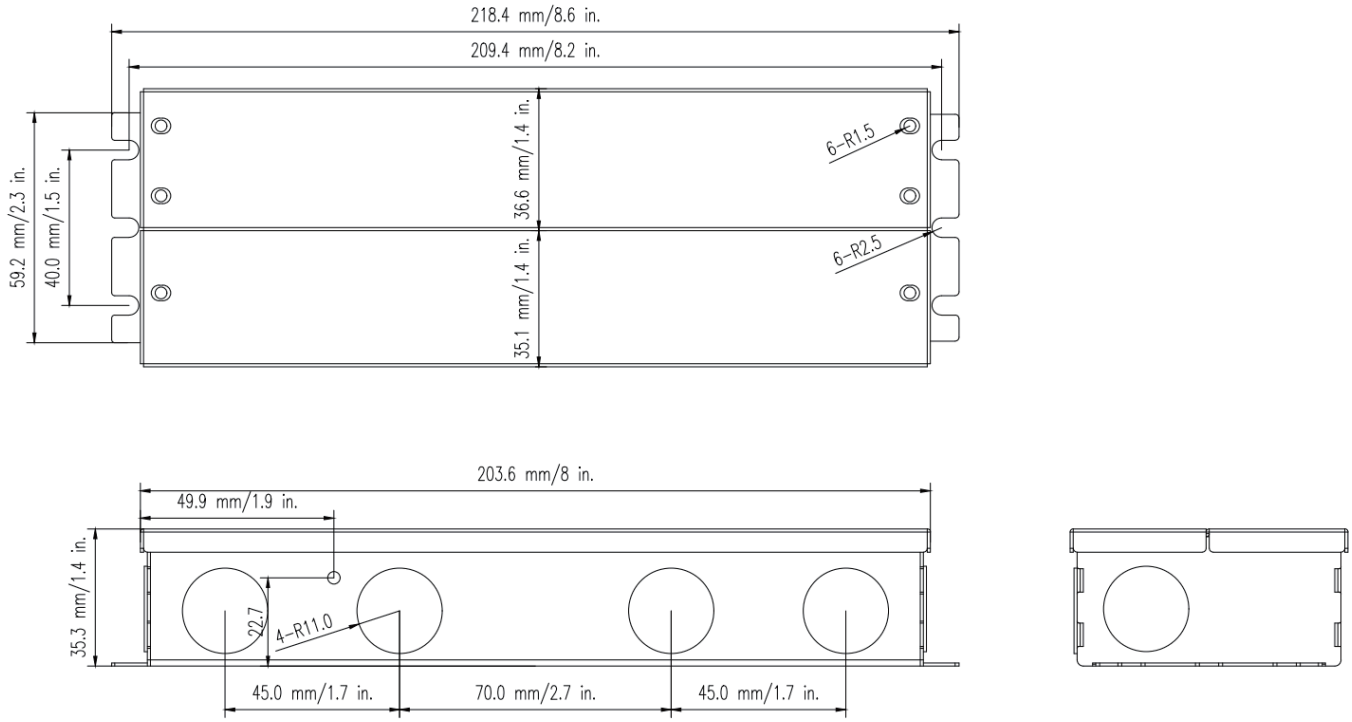

Wiring Diagram

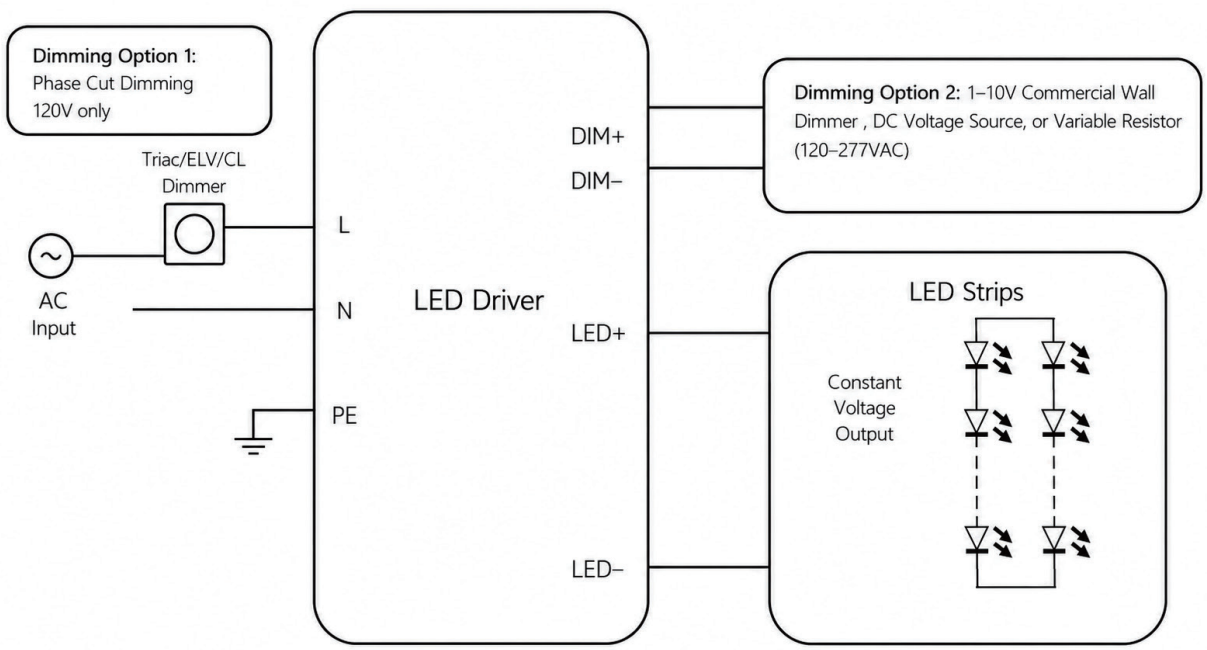

CVP-A1



Features & Benefits

- High Efficiency up to 94%
- 24V-48V output voltage options
- Compact design
- IP65 rated case with silicone-based potting
- All-round protection: SCP, OVP, OPP
- UL Class2 output, Class P
- Operating temperature: -35℃~+50℃
- Complies with IEEE1789, UL8750
- Nominal lifetime up to 50,000 hours
- 5-year warranty

Product Dimensions

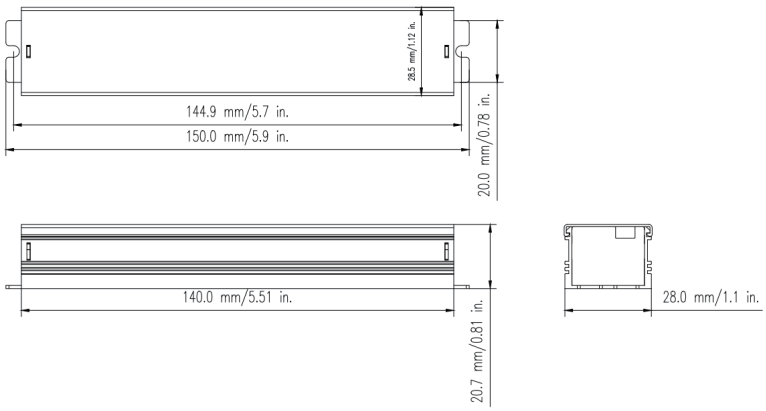

Model List

Model	Rated Input Voltage	Max Output Power	Output Current	Rated Output Voltage	Dimming Control	Dimming Range	Efficiency	Dimension
CVP-A1-096S024U-ND	120-277VAC	96W	0-4000mA	24VDC	N/A	N/A	94%	140×28×20.7 mm 5.5×1.1×0.8 in.
CVP-A1-096S036U-ND	120-277VAC	96W	0-2667mA	36VDC	N/A	N/A	94%	140×28×20.7 mm 5.5×1.1×0.8 in.
CVP-A1-096S048U-ND	120-277VAC	96W	0-2000mA	48VDC	N/A	N/A	94%	140×28×20.7 mm 5.5×1.1×0.8 in.

CVW-A1

Tri-mode



Features & Benefits

- Tri-mode dimming: 0-10V,1-10V,MLV,ELV,TRIAC
- 24V-48V output voltage options
- Linear form factor, compact design
- Isolated 0-10V dimming, dimming down to 0.1%
- Flicker-free, excellent camera compatibility, spec-grade smoothness
- All-round protection: SCP, OVP, OTP, OPP(CC/CV mode, especially suitable for LED strip)
- IP66 design for indoor and outdoor installations(wet location)
- Constant voltage PWM style output
- Class2, Class P
- Operating temperature: -35℃~+55℃
- Complies with IEEE1789(≥1% dimming), UL8750
- Nominal lifetime up to 50,000 hours
- 5-year warranty

Optional Functions

- Input voltage: 120-277VAC or 120-347VAC
- Complies with leading-edge/trailing-edge dimmer
- Wide load range from 10% to 100%(TRIAC Dimming)
- Aux power, 12V/50mA

Model List

Model	Rated Input Voltage	Max Output Power	Output Current	Rated Output Voltage	Dimming Control	Dimming Range	Efficiency	Dimension
CVW-A1-096S024a-VT	120-277VAC 120-347VAC	96W	0-4000mA	24VDC	Tri-mode	0.1%	90%	191×34.5×32 mm 7.5×1.3×1.2 in.
CVW-A1-096S036a-VT	120-277VAC 120-347VAC	96W	0-2666mA	36VDC	Tri-mode	0.1%	91%	191×34.5×32 mm 7.5×1.3×1.2 in.
CVW-A1-096S048a-VT	120-277VAC 120-347VAC	96W	0-2000mA	48VDC	Tri-mode	0.1%	91%	191×34.5×32 mm 7.5×1.3×1.2 in.

a=U/M
U:120-277VAC
M:120-347VAC

Product Dimensions

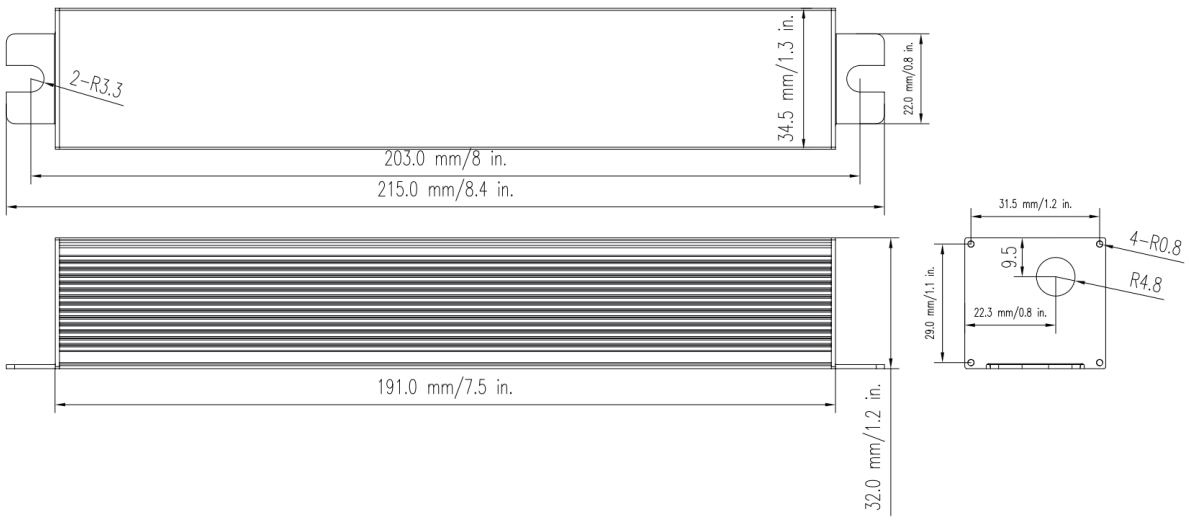

Wiring Diagram

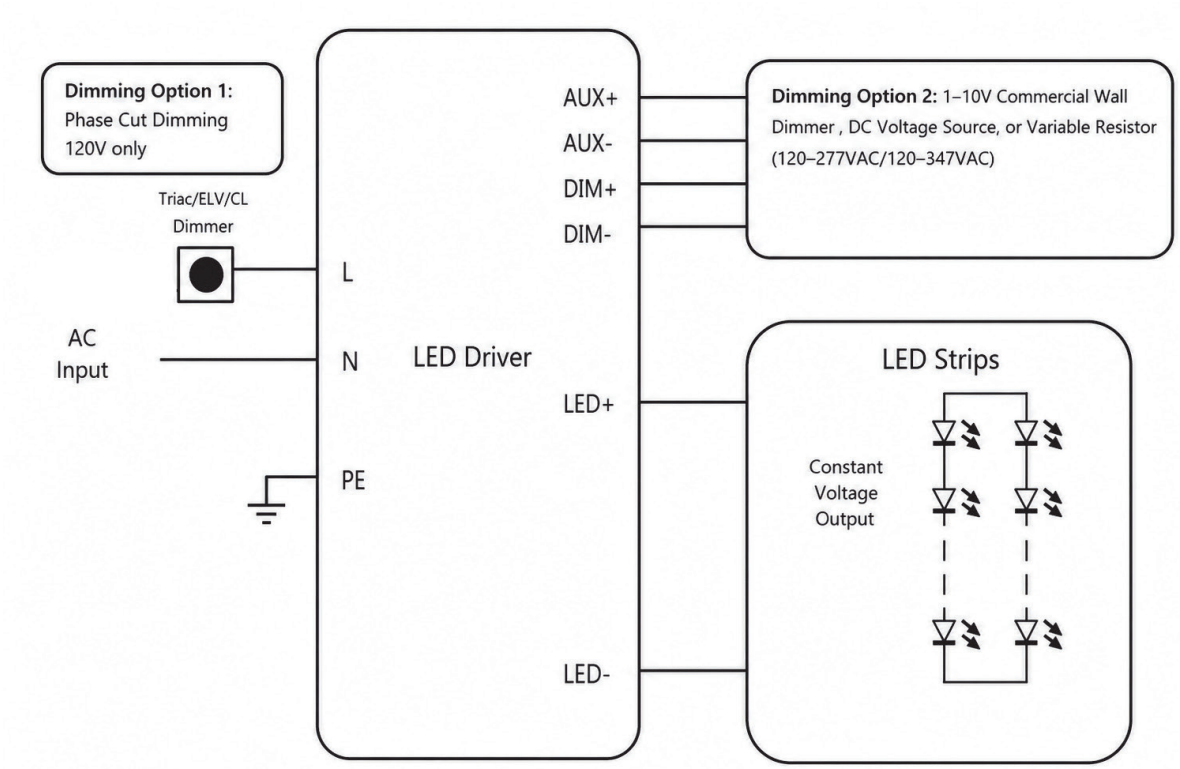

CVL-B1

0-10V

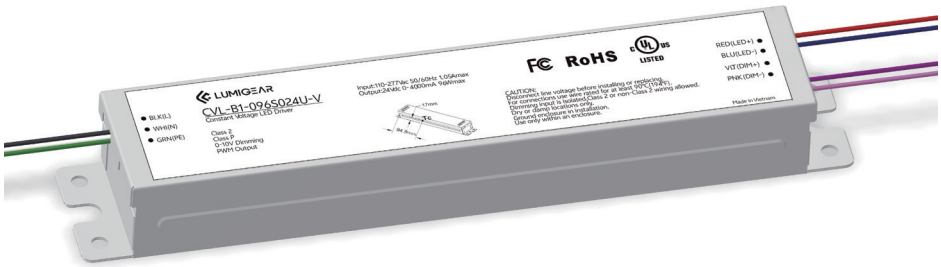

Features & Benefits

- All-round protection: SCP, OVP, OTP, OPP(CC/CV mode, especially suitable for LED strip)
- Flicker-free, excellent camera compatibility, spec-grade smoothness
- Isolated 0-10V dimming, PWM output, down to 0.1% dimming level
- Painted sheet steel
- Nominal lifetime up to 50,000 hours
- 5-year warranty

Optional Functions

- Aux power of 12V/100mA
- Category B 6KV/IP65

0/1-10V c UL us LISTED P CLASS 2 CLASS

Model List

Model	Rated Input Voltage	Max Output Power	Output Current	Rated Output Voltage	Dimming Control	Dimming Range	Efficiency	Dimension
CVL-B1-096S024U-V	120-277VAC	96W	0-4000mA	24VDC	0-10V	0.1%	89%	210.8×44.5×30.5 mm 8.3×1.7×1.2 in.
CVL-B1-096S048U-V	120-277VAC	96W	0-2000mA	48VDC	0-10V	0.1%	89%	210.8×44.5×30.5 mm 8.3×1.7×1.2 in.

Product Dimensions

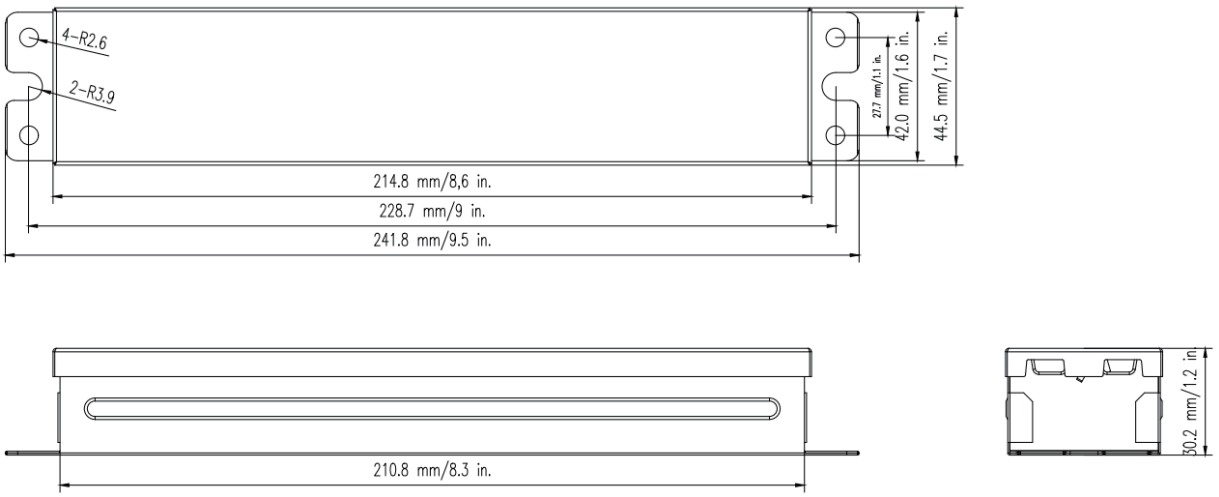

Wiring Diagram

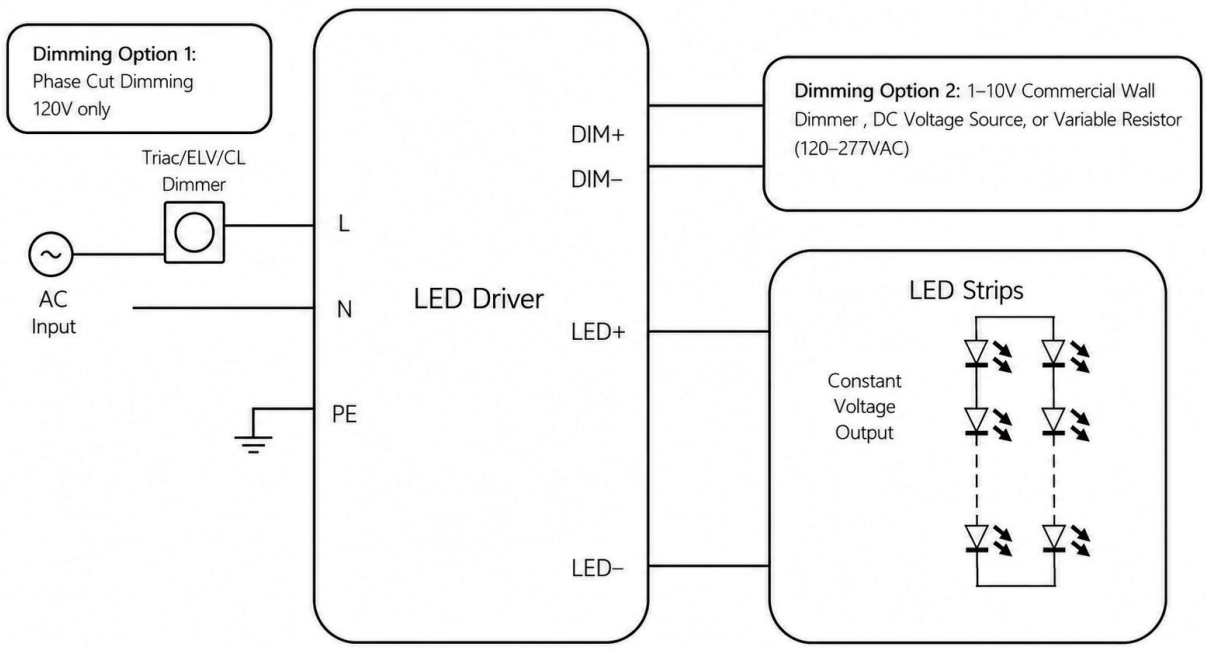

DC-A1

DMX512/RDM

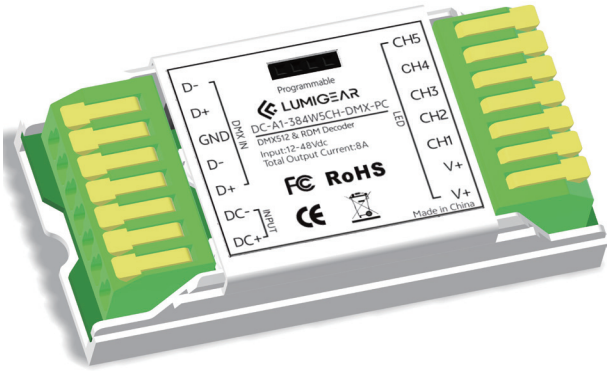

Features & Benefits

- Compact modular design with aluminum sheet metal case
- Silicone potting for improved thermal performance
- DMX512 RDM decoder, RDM function can realize intercommunication
- DMX512/RDM decoder with bidirectional communication between the DMX controller and decoder
- The RDM function allows configuration of the decoder address directly from the DMX controller console
- Five PWM output channels with common anode configuration. DMX channel modes from 1CH to 5CH
- Galvanic isolation
- Operating temperature: -40℃~+50℃

Programmable Features

- Device mode: Master and Decoder mode
- DMX Start Address
- DMX Mode : 8bit/16bit
- DMX Device Label
- Channel output: Enable/Disable
- Dimming curve gamma value from 0.1 to 9.9 settable
- Output PWM frequency from 500HZ ~ 35K HZ settable
- DMX address mapping
- Default brightness in no-signal mode
- Scene Number, Brightness level, scene speed
- Min Dimming Ratio
- OTP point

Model List

Model	Rated Input Voltage	Max Output Power(Total)	Output Current /Channel	Output Current /Total	Dimension
DC-A1-384W5CH-DMX-PC	12-48VDC	384W max.	8A	8A	65*31*15.2 mm 2.5 × 1.2 × 0.6 in

Programming Tools

Programming Interface	PGT-USB-TPAC-A	
Programming Cables	PGT-USB-M4P2	

Product Dimensions

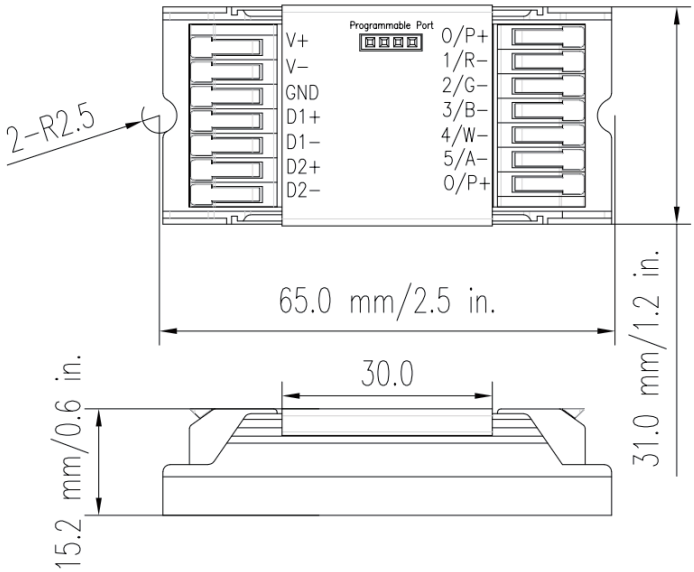

Wiring Diagram

Master mode :

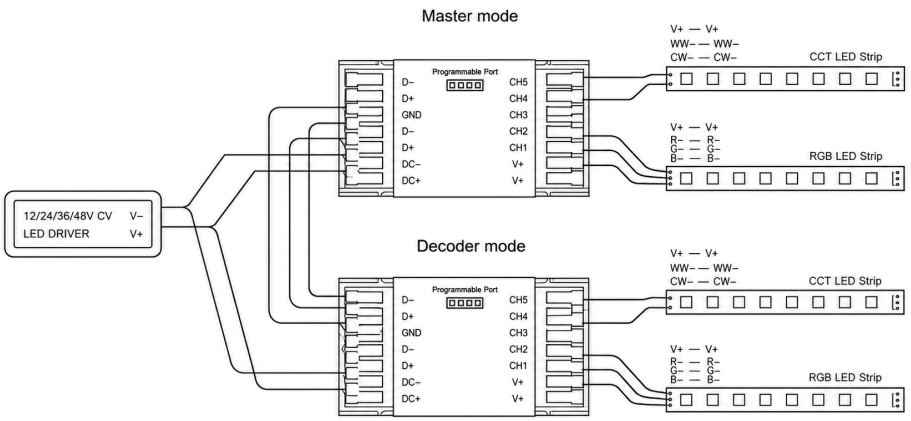

Decoder mode:

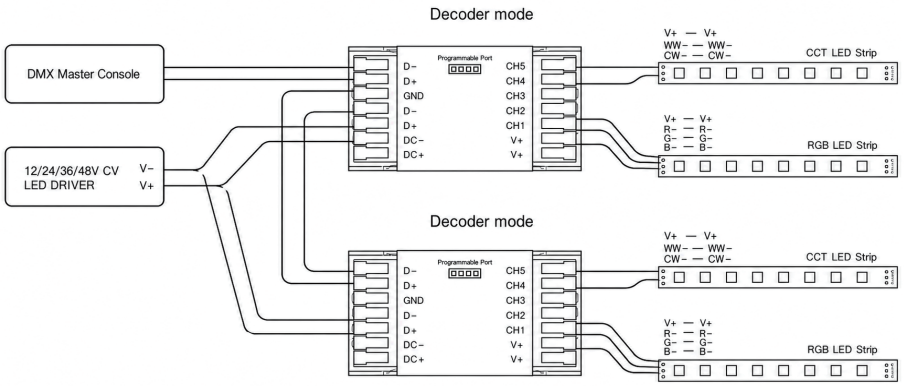

Central CV Enclosure

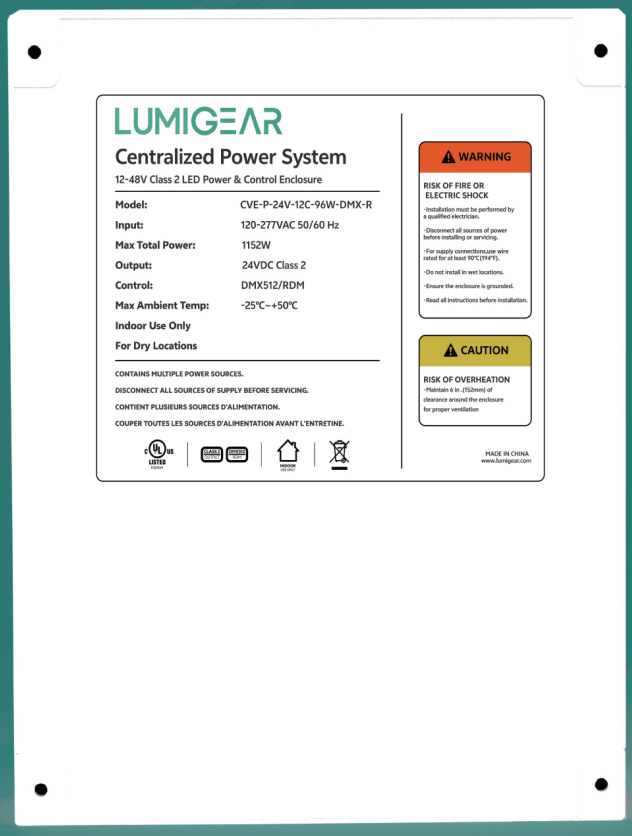

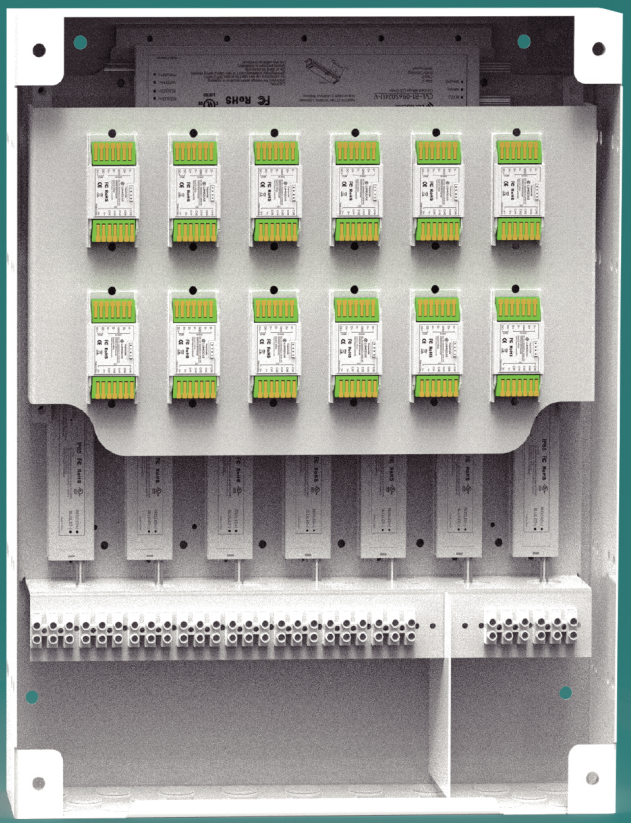

DALI 2

Tri mode: TRIAC / ELV / 0-10V

DMX

Central CV Enclosure

12-48V Class 2 LED Power & Control Enclosure

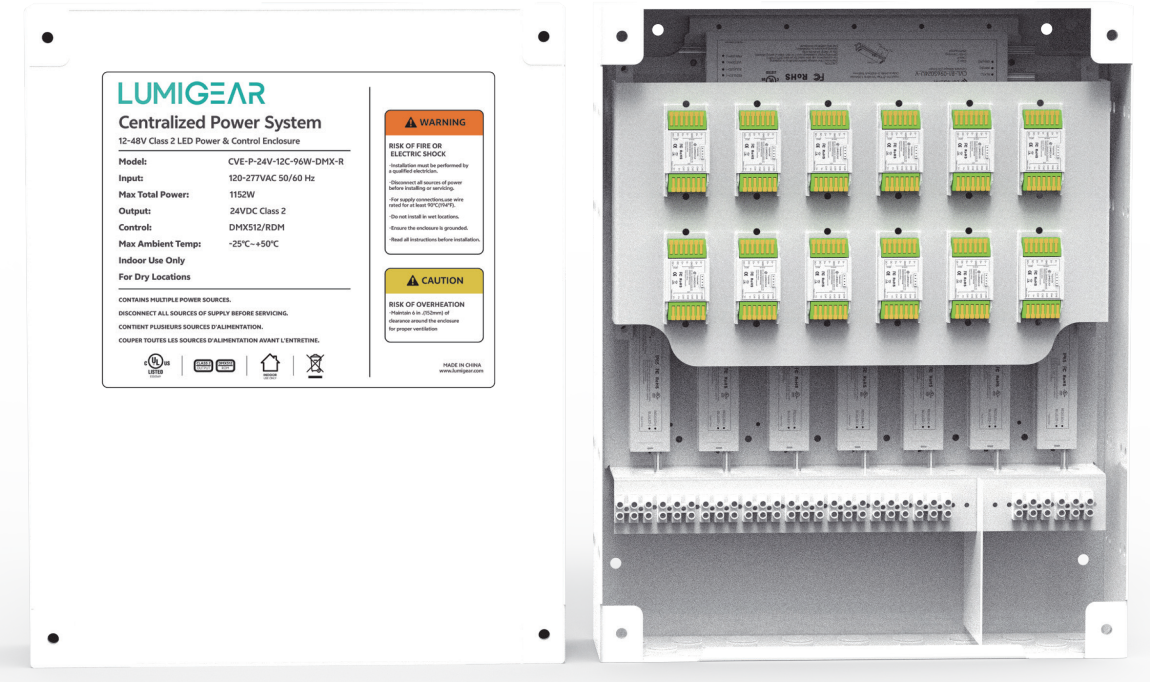

Key Features

- Purpose-built lighting system enclosure for high-end architectural projects.
- Centralized installation for up to 12 pcs 96W CVP drivers.
- Supports 12V/24V /36V/ 48V constant voltage LED output circuits.
- Class 2 low-voltage lighting circuit concept for safer field wiring.
- Control-ready design with standard 0–10 V Tri-mode and DMX options, plus reserved DALI configurations.
- Front-serviceable structure for driver replacement and maintenance.
- The power supplies and decoders are all prewired together along with terminal blocks for power and control wires

Easier to Install. Easier to Service

- Fast Fault Location

Drivers and control modules are arranged and labeled by circuit, allowing the corresponding component to be identified quickly when an issue occurs.

- Front-Access Replacement

Modules are accessible from the front of the enclosure, reducing disassembly steps and service-clearance requirements.

- Independent Circuit Service

When a single module fails, maintenance can be limited to the corresponding circuit, minimizing impact on other lighting areas.

Ordering Guide

A1 Product	A2 Driver Type	A3 Output Voltage	A4 Circuit Qty	A5 Power	A6 Control	A7 Mounting
CVE	P / L/W P=CVP L=CVL W=CVW	12V/24V/36V/48V	1-12 channel=1-12C	60W/96W	V=0-10V VT=0-10V+TRIAC/ELV DALI=DT6/DT8/D4i DMX=DMX512/RDM	Recessed=R Surface=S

Configuration Examples

Model	Driver Qty	LED Driver	Max Driver Power	Total Installed Power	Output Voltage	Control Readiness
CVE-P-24V-12C-96W-DMX-R	12 pcs	CVP+DMX decoder	96W	1152W	24VDC	DMX512/RDM
CVE-L-24V-7C-96W-V-R	7 pcs	CVL	96W	672W	24VDC	0-10V
CVE-W-24V-9C-96W-VT-R	9 pcs	CVW	96W	964W	24VDC	0-10V+TRIAC/ELV

Exploded View



Housing

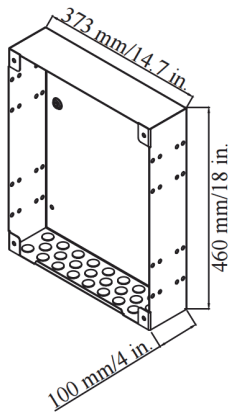

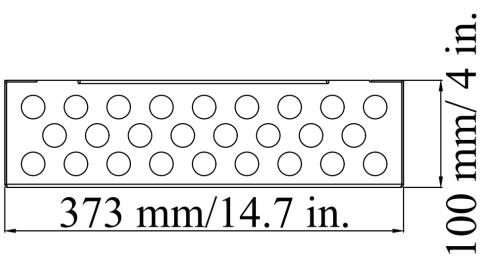

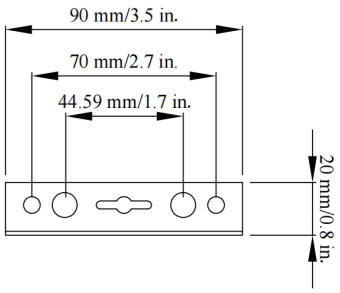

LUMIGEAR

www.lumigear.com
E-Mail: info@lumigear.com
10601 Walker St, 1st Floor, Cypress
CA 90630, United States