AFP-B1E-024S0850U-VT-X

24w Programmable, 1% dimming, TRIAC+0~10V, Constant Current Series

LUMIGEAR

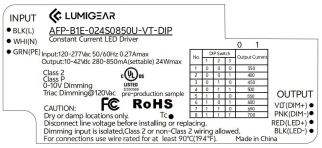

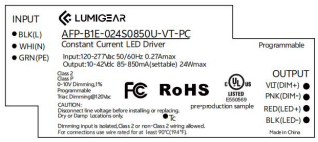

Features & Benefits

- Universal AC Input Voltage(120-277VAC)
- Compact design, Gray PC case
- Selectable output current by 8 positions DIP switch(DIP Style)
- External current select switch with programming feature, please contact LUMIGEAR for details(PC Style)
- Comply with phase cut dimming and isolated 0-10V dimming, dim down to true 1%
- Suitable for indoor use
- Flicker free, excellent camera compatibility
- UL Class2,Class P
- Combination Wave 2KV, Ringwave 2.5KV
- Operating temperature: -40℃~+50℃
- Comply with IEEE1789, UL8750

Model List

Model Name	Rated Input Voltage	Max Output Power(Total)	Output Current(Total)	Rated Output Voltage	Efficiency	Dimension
AFP-B1E-024S0850U-VT-DIP	120-277VAC	24W max.	280-850mA	10-42VDC	87%	85.6*41.6*24.7mm/ 3.3×1.6×0.9 in.
AFP-B1E-024S0850U-VT-PC	120-277VAC	24W max.	84-850mA	10-42VDC	87%	85.6*41.6*24.7mm/ 3.3×1.6×0.9 in.

Optional Function

· Aux power, 100mA/12V

Approvals

TRIAC 0/1-10 V c UL us LISTED CLASS P

Model name code

AFP-B1E	-	024S	0850	U	–	VT	–	X
①		②	③	④		⑤		⑥

①	Series	AFP Series
②	Output power	Maximum output power:24W
③	Output current(max)	Maximum output current:850mA
④	Input voltage	120-277VAC
⑤	Dimming Control	Triac&0-10V
⑥	Programmable	PC=USB-PC DIP=DIP Switch

www.lumigear.com
sales@lumigear.com

Specification:

Parameters	Symbols	Test Conditions / Comment	Min	Typ	Max	Units
INPUT						
Input Voltage	V_{IN}		108		305	V_{AC}
Rated Input Voltage	$V_{IN\ RATED}$		120		277	V_{AC}
	$V_{IN\ RATED_TRIAC}$	Phase Cut Dimming		120		V_{AC}
Input Frequency	f_{line}		47	50/60	63	Hz
Input Current	I_{IN}	Full Load, V_{IN} = 120V_{AC}			0.27	A
Inrush Current	I_{INRUSH}	Cold Start, V_{IN} = 277V_{AC}			20	A
Leakage Current	$I_{Leakage}$	V_{IN} = 277V_{AC} 60Hz			0.75	mA

Number of Drivers per MCB(Circuit Breaker)	MCB type	B10	C10	D10	B13	C13	D13	B16	C16	D16	B20	C20	D20
	120V_{AC}	25	29	33	32	37	43	40	46	53	50	58	66
	277V_{AC}	13	23	46	18	30	60	22	37	74	27	46	93

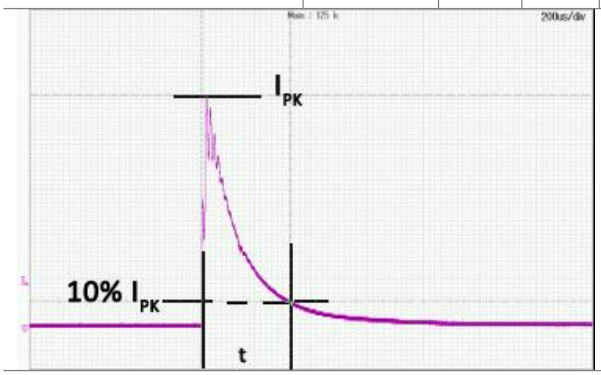

Input Voltage	Inrush Current	t(us)10%-10%
120VAC	8.0A	254
277VAC	15.8A	208
347VAC	NA	NA

General Characteristics

Power Factor	PF	20-100% load, V_{IN} = 120V_{AC}	0.9			PF
		50-100% load, V_{IN} = 277V_{AC}	0.9			
Total Harmonic Distortion	THD	20-100% load, V_{IN} = 120V_{AC}			20	%
		50-100% load, V_{IN} = 277V_{AC}			20	%
Turn On Delay Time	T_{on_delay}	Cold Start, Without Dimmer			0.5	S
Efficiency	η	I_{OUT}=500mA, V_{IN} =120V_{AC}, Steady state	85	87		%
		I_{OUT}=500mA, V_{IN} =277V_{AC}, Steady state	85	87		%

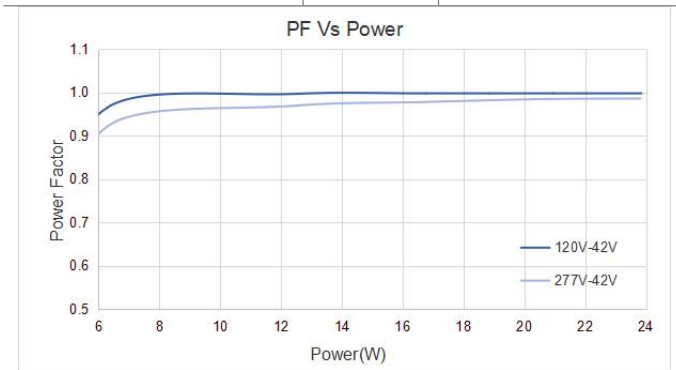

www.lumigear.com
sales@lumigear.com

OUTPUT

Output Current Tolerance	t	I_{OUT}=(40-100%)I_{MAX}			5	%
		I_{OUT}=(10-39%)I_{MAX}			7	%
Output Current Range	I_{OUT}		0.1		100	I_{MAX}%
Output Voltage	V_{OUT}		10		42	V
Line Regulation	$V_{OUT-LINE}$				1	%
Load Regulation	$I_{OUT-LOAD}$	V_{OUT} from MIN. to MAX.			5	%
Ripple Current	$I_{OUT-RIPPLE}$	Full Load, (Iomax-Iomin)/(Iomax+Iomin)			10	%
Output Current Overshoot	$I_{OVERSHOOT}$	Turning Power ON			10	%

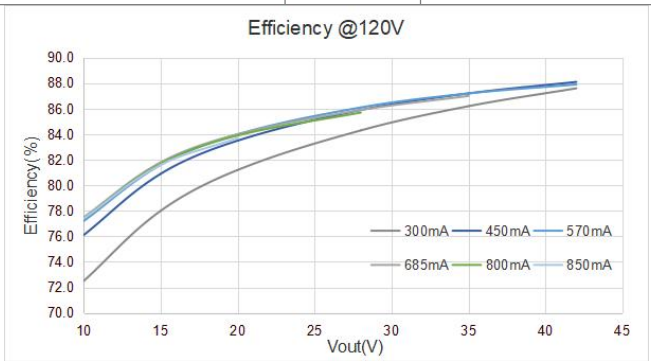

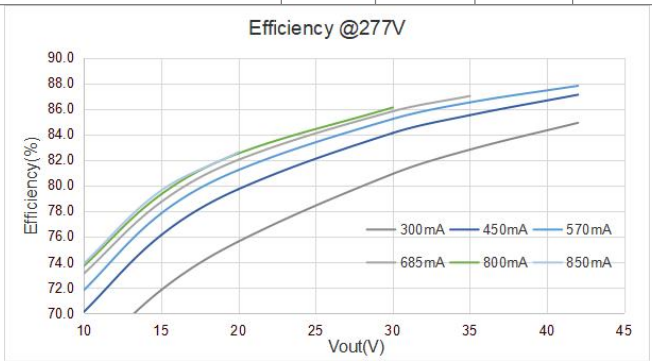

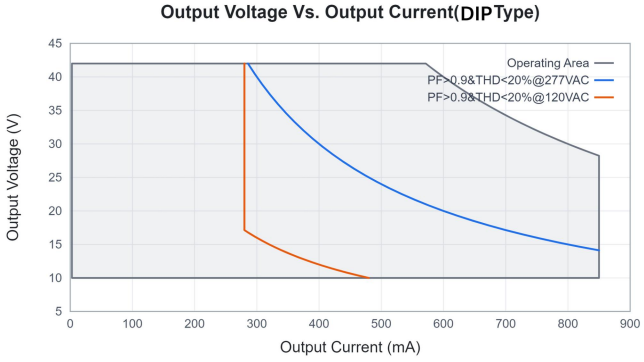

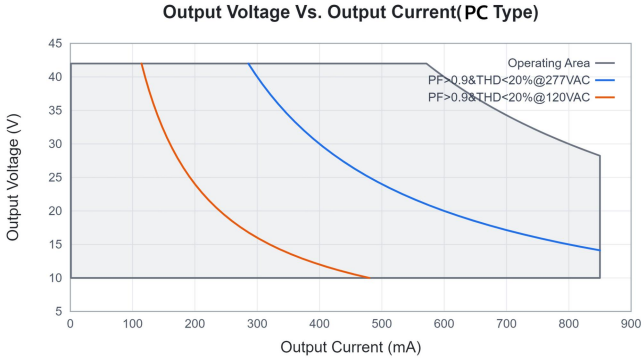

0~10V or Resistor Dimming

The 0~10V or resistor dimming can be used to dim the output current via a standard commercial wall dimmer (0~10V_{DC}) or an external control voltage source (0~10V_{DC}) or external resistor.

Dimming Curve	Linear. please see "Dimming curve".					
Absolute Maximum Voltage on 0~10V Pin	V_{DIM}		0		300	V_{AC}
Source Current on 0~10V Dimming Pin	I_{DIM}			200		uA
Light On	V_{DIM-on}	Programmable		0.9		V
Light Off	$V_{DIM-off}$	Programmable		0.7		V
Dimming Voltage for Full Bright	$V_{DIM-MAX}$	Programmable		8		V
Standby power	$P_{STANDBY}$	Light Off, Vin=120VAC			0.6	W

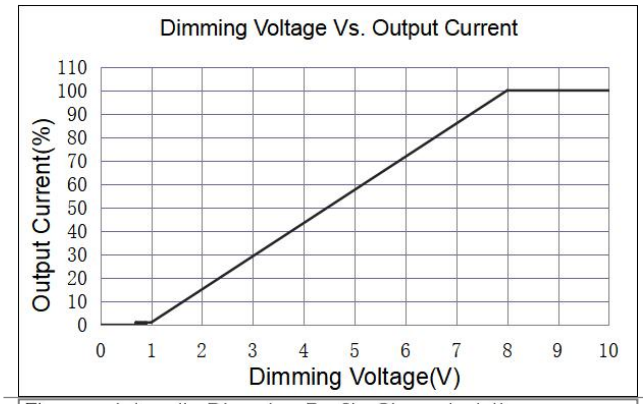

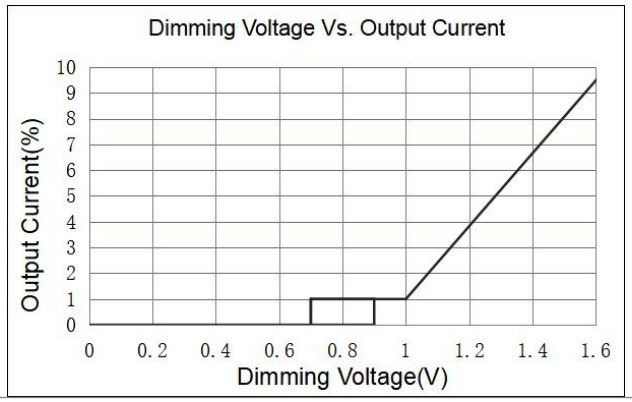

Figure 1: Intensity Dimming Profile Characteristics

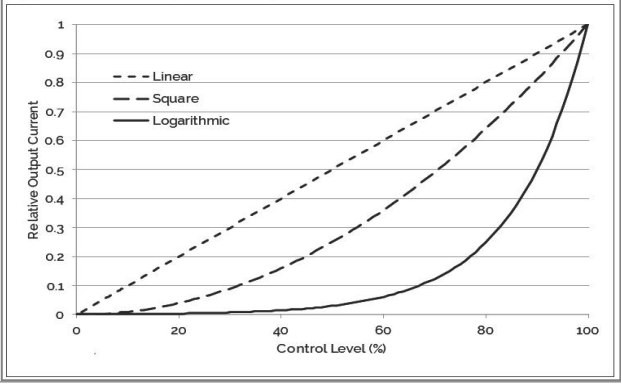

Phase Cut Dimming

The unit is compatible With Leading-edge and Trailing-edge Dimmer.

Input Voltage	$V_{IN\text{-}TRIAC\ DIM}$			120		V_{AC}
Suggest Load Range	$P_{Suggest}$	V_{IN} = 120 V_{AC}	40		100	%

Compatible Phase Cut Dimmer List

No.	Mfg.	Model	Remark	No.	Mfg.	Model	Remark
1	Lutron	MACL-153M		12	Leviton	1B34L1	
2	Lutron	LGCL-153PL		13	Leviton	IPL06	
3	Lutron	GLU12-F23622		14	Leviton	SureSlide 6633	
4	Leviton	111506		15	Leviton	IPE04	
5	Lutron	GLV-600		16	Leviton	IPL06-102	
6	Lutron	D-600P		17	Lutron	DVCL-153P	
7	Lutron	DVLV-600P		18	Legrand	LSLV603	
8	Lutron	MALV-600		19	Legrand	RHCL453P	
9	Lutron	NT-1000		20	Lutron	1K35O2	
10	Lutron	SLV-600P		21	Lutron	DV-600P	
11	Lutron	MA-600					

Programming(PC Type)

The driver is programmable , Please contact LUMIGEAR for details.

NO.	Item	Default Setting
1	Output current(1mA step)	See"Model list" for each model
2	Dim to off(0-10V)	Enable
3	Min Dimming Level	1%
4	0-10V Dimming curve: Log/linear/customer dim curves	See "0~10V or Resistor Dimming" section
5	Over Temperature Protection: Foldback mode, Linear decrease mode	See "Protection" section
6	Over load protection	See "Protection" section
7	Fade time	10mS
8	Programmable RMS voltage with turn-on , turn-off and full brightness for phase cut dimming	Turn on at $18V_{AC}$, turn off at $15V_{AC}$, Clamp at $30V_{AC}$, full brightness at $108V_{AC}$

P2.0 Female Plug	Programming software	"LUMIGEAR Programming Tool"				
	Programming tool	"Lumigear tool box"				
	Operating voltage			5	5.5	V
Programming Interface	PGT-USB-TPAC-A					
Programming Cables	PGT-USB-F4P2					

Protection

Over Voltage Protection	V_{OVP}	The unit will recover automatically after fault conditions is removed.		60		V
Over Temp. Protection	T_{OTP}	Current linear reduced when hotspot greater than T_{OTP}		95		℃
Over load protection	P_{OLP}	Programmable. Output current will decrease when output power reach P_{OLP}	9.6		24	W
OLP tolerance	t_{OLP}		100		110	%
Short Circuit Protection	The unit will recover automatically after fault conditions is removed.					

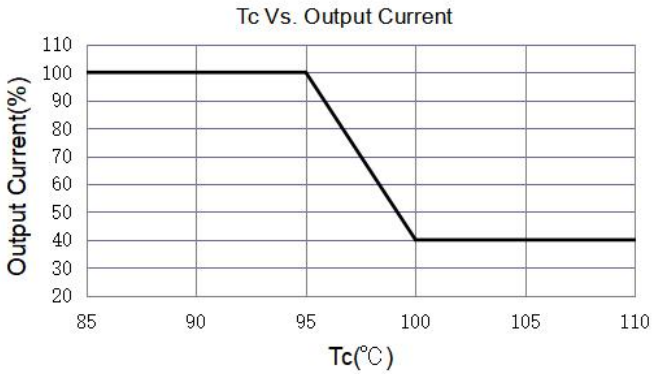

Environment

Storage Temperature	$T_{Storage}$	Humidity: 5% RH to 95% RH	-40	-	+85	℃
Ambient Operating Temperature	T_a		-40	-	+50	℃
Max. Case Temperature	T_c	Hot spot on case			90	℃
Operating Relative Humidity	H_a	Non-Condensing	10		90	%
Acoustic Noise		Measured from 1 m w/o dimmer.			24	dBA
Cooling	Convection Cooling					
IP Rating	Dry and damp UL approved					

Others

Life Time	T_{Life}	Full Load, 80℃ case temperature	50			kHrs
MTBF	T_{MTBF}	Full Load, 25℃ ambient temperature	200			kHrs
Net Weight	W_{NET}			150		g
Warranty	5 Years Warranty at T_c ≤80℃					
Flicker	IEEE 1789, title 24					

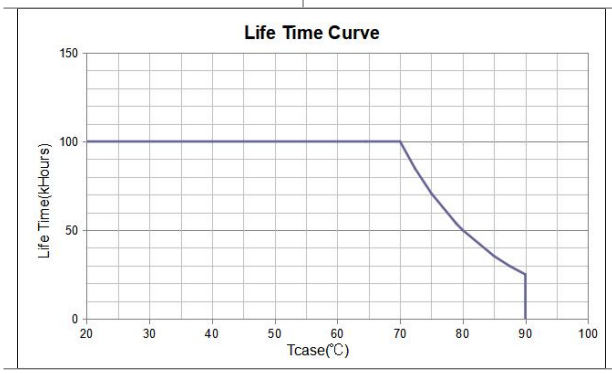

Safety Compliance

CUL/UL	UL8750, CAN/CSA-C22.2 No. 250.13

Electromagnetic Compliance

EMC Requirements	Standard	Conditions
EMI Emissions	FCC Title 47 Part 15	Class B at $120V_{AC}$, Class A at $277V_{AC}$
Voltage Fluctuations and Flicker	IEC61000-3-3	
Immunity Compliance	IEC 61000-4-2	±8kV air Discharge, ±6kV Contact Discharge
	ANSI/IEEE C62.41-2002	± 2kV Common and Differential Mode, test at 2 Ω, 5 strikes/1minute interval (40 total strikes)
	ANSI/IEEE C62.41.1-2002	2.5kV Ring Wave, test at 30Ω 7 Strikes/1 minute interval, Common and Differential mode, 56 total strikes
	IEC 61000-4-11	>95% dip, 5 period; 30% dip, 25 periods; 95% reduction, 250 periods
	IEC 61000-4-4	± 2kV Direct couple to Line input, 5kHz repitition rate, 15mS duration, 300mS period. 7 coupling paths, 1 minute per path (14 total combinations)

Note: Unless otherwise specified, all the above parameters are measured at ambient temperature of 25℃ and rated voltage.

Output Current Code Table(DIP Type):

Mode Name	Switch's status (0 or 1)			Output Current(mA)
	3	2	1	
AFP-B1E-024S0850U-VT-DIP	0	0	0	350
	0	0	1	400
	0	1	0	450
	0	1	1	500
	1	0	0	550
	1	0	1	600
	1	1	0	650
	1	1	1	700

Typical Application

PC Style

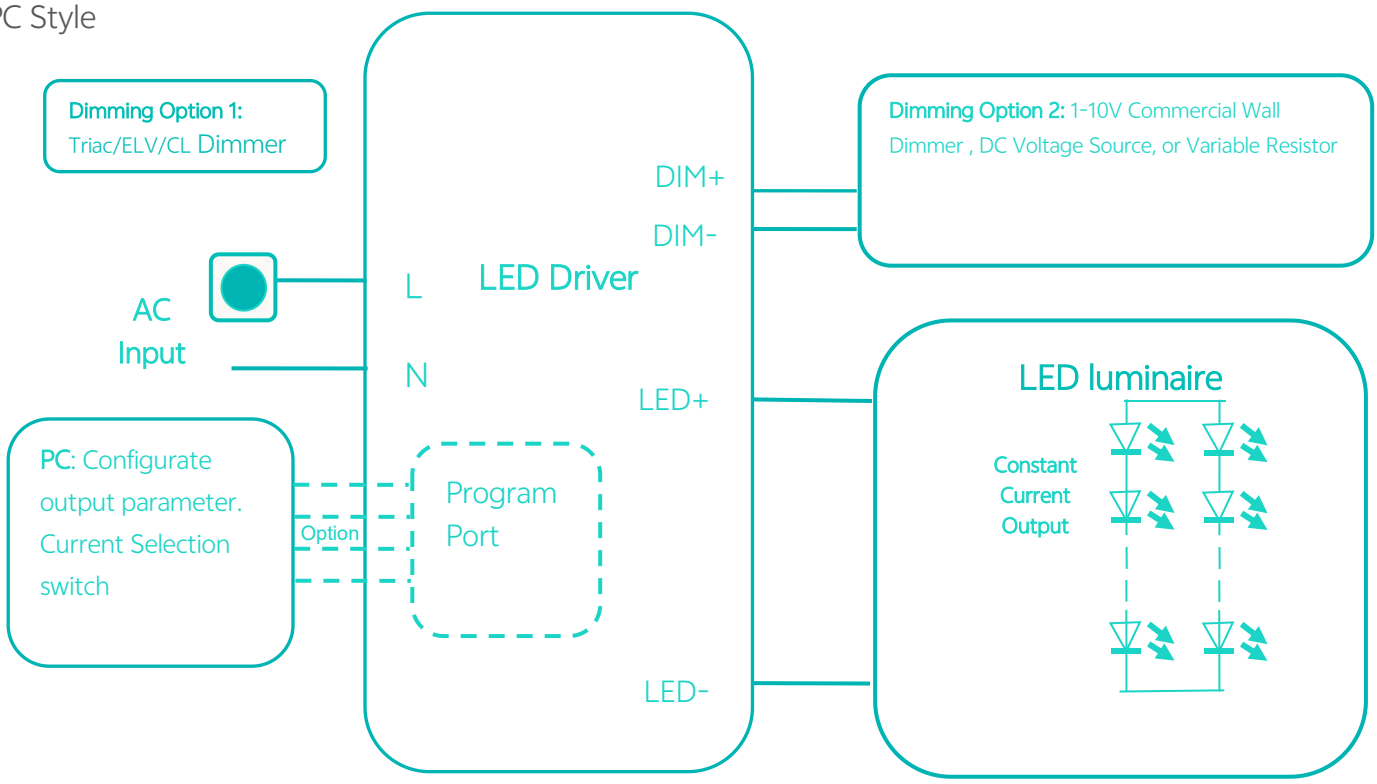

DIP Style

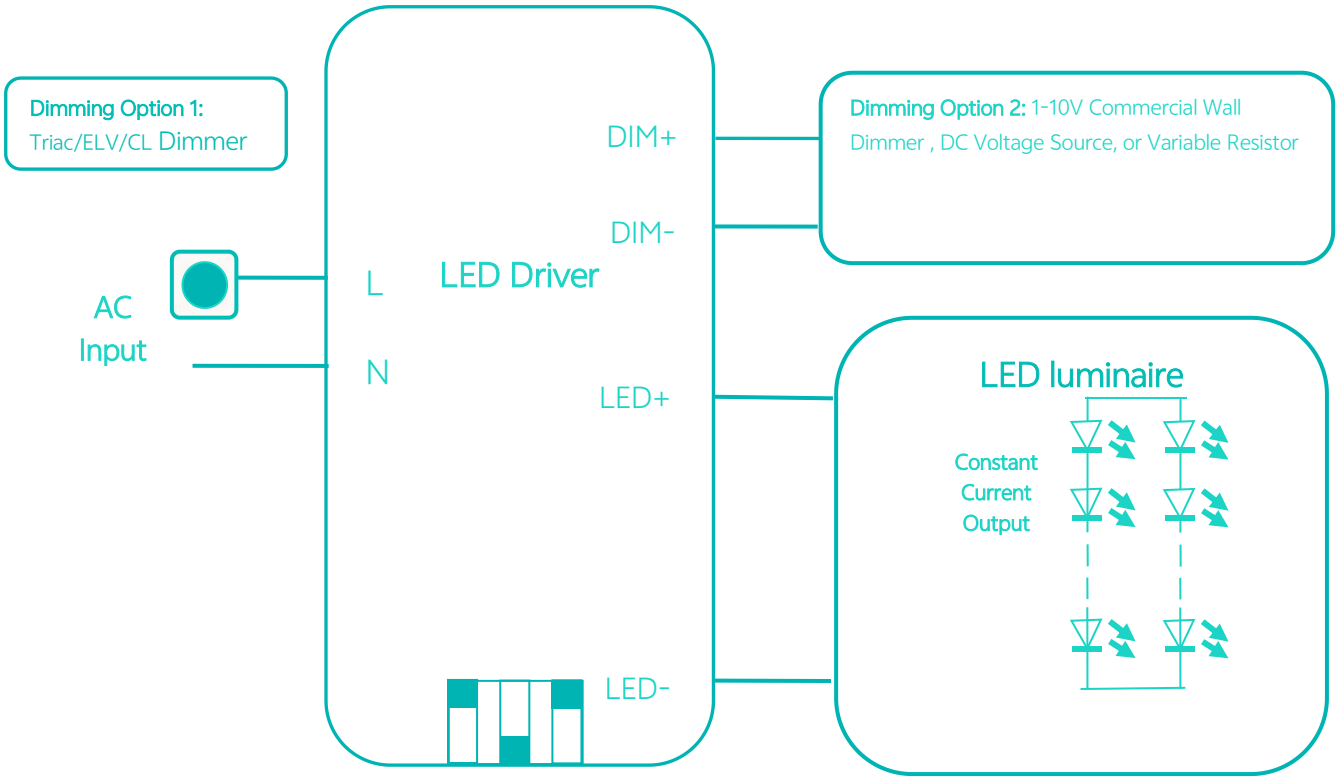

Packaging

Driver quantity (pcs)	Layer	Weight (kg)	Outer dimensions of Carton L*W*H(mm)
80	6	13.5	L365*W340*H270

Mechanical Drawing:(85.6*41.6*24.7mm/3.3*1.6*0.9 in.)

Dimensions(Unit:mm)

Default tolerance:±1mm

DIP

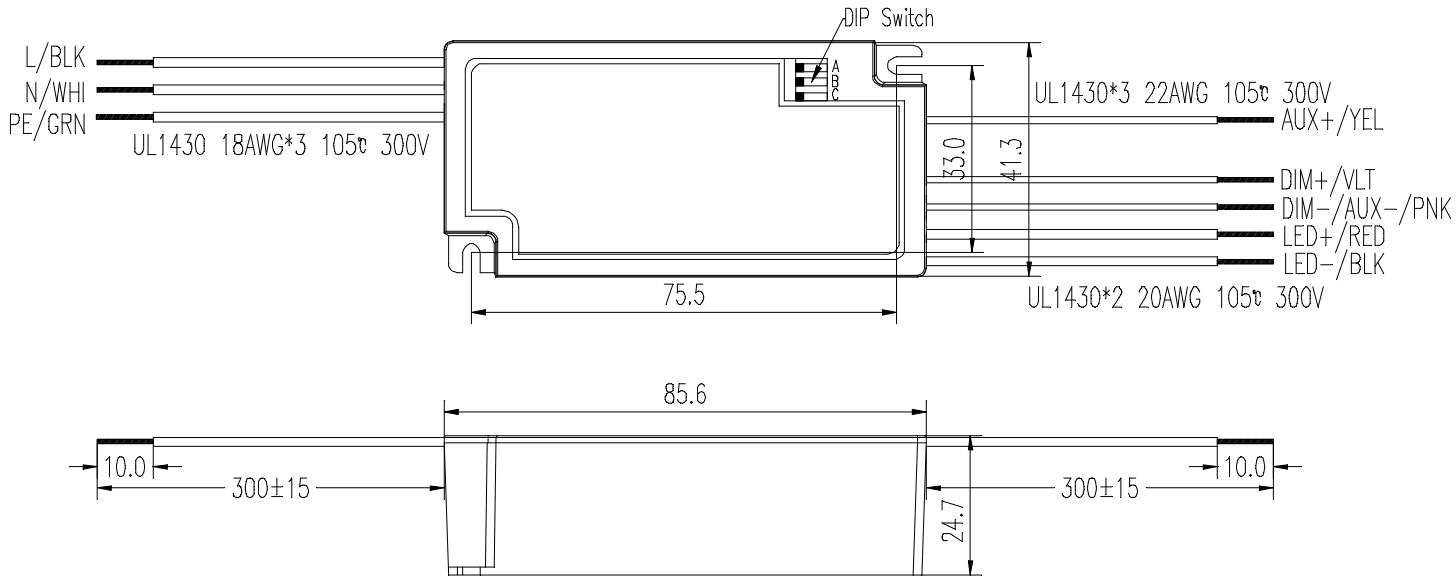
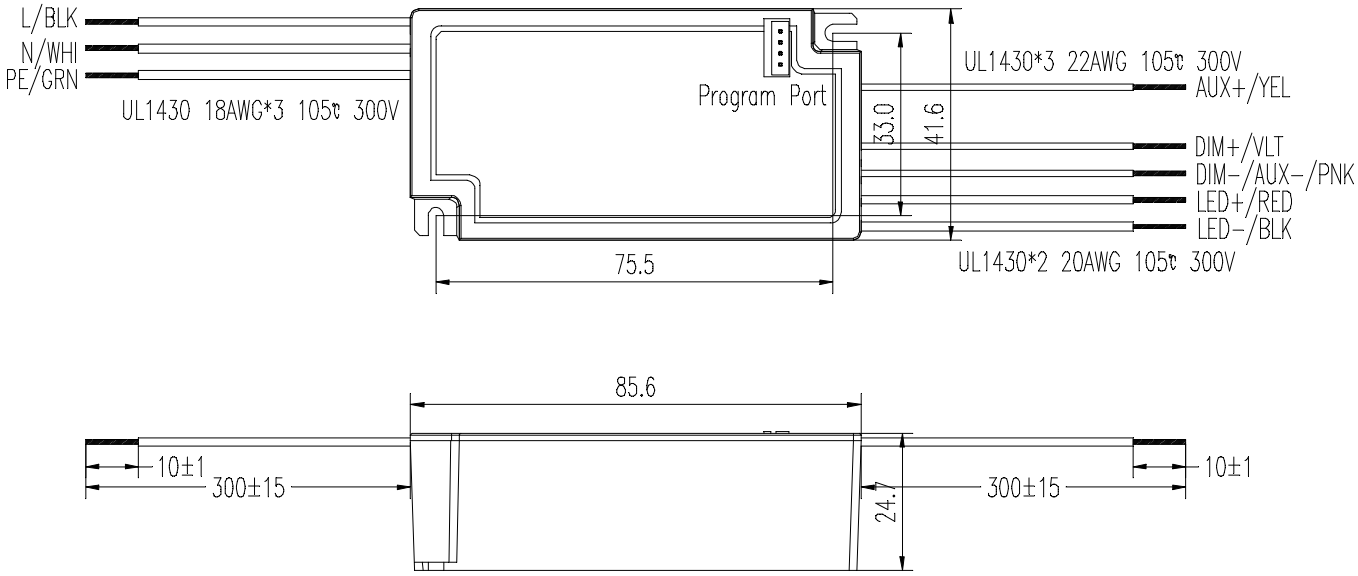
PC